Dummy Thor

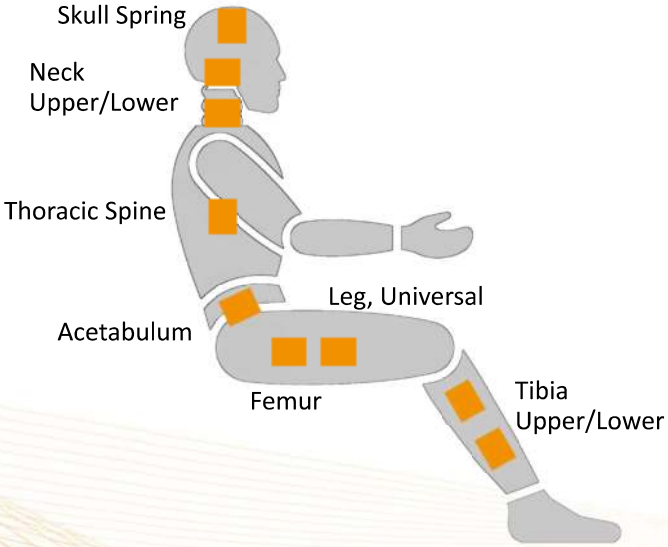

Location	Axial	Model*	Page
Skull Spring	1	F1ARA11A	83
Neck, Upper	6	N6ALD11A	84
Neck, Lower	6	N6AKM11A	85
Thoracic Spine	5	N5ASA11A	on request
Thoracic Spine	5	N5ASD11A	86
Acetabulum Left/ Right	3	F3A3A11A; F3A3B11A	87
Acetabulum Left/ Right	5	N5A3A11A; N5A3B11A	89
Leg, Universal	6	N6AGA10A	91
Femur	6	N6ACB11A	92
Femur	6	N6ACC11A	on request
Tibia, Upper	5	N5AUB11A	93
Tibia, Lower	5	N5ATB11A	94

*additional versions available on request!

F1ARA11A

Dummy side view see page 99

Description	Load Cell, 1-axial Skull Spring	
Measuring range *Fz*	kN	4,4
Sensitivity[1)] *Fz*	µV/V/kN	523
Output signal[1), 2)] *Fz*	mV/V	2,3
Bridge resistance *Fz*	Ω	1050
Zero signal[1)]	mV/V	≤ 0,05
Amplitude non-linearity[3)]	%	≤ 1,0
Hysteresis[3)]	%	≤ 1,0
Channel crosstalk[3)]	%	-
Supply voltage	V	2–15
Ultimate load	%	150
Insulation resistance	MΩ	> 100
Temperature range	°C	–30..+70
Weight (approximate)	g	15 (without cable)
Application	Thor, BioRID	

All values measured at 10 V sensor supply voltage and at 23 °C.

[1)] Typical value, [2)] At nominal load, [3)] Relative nominal range

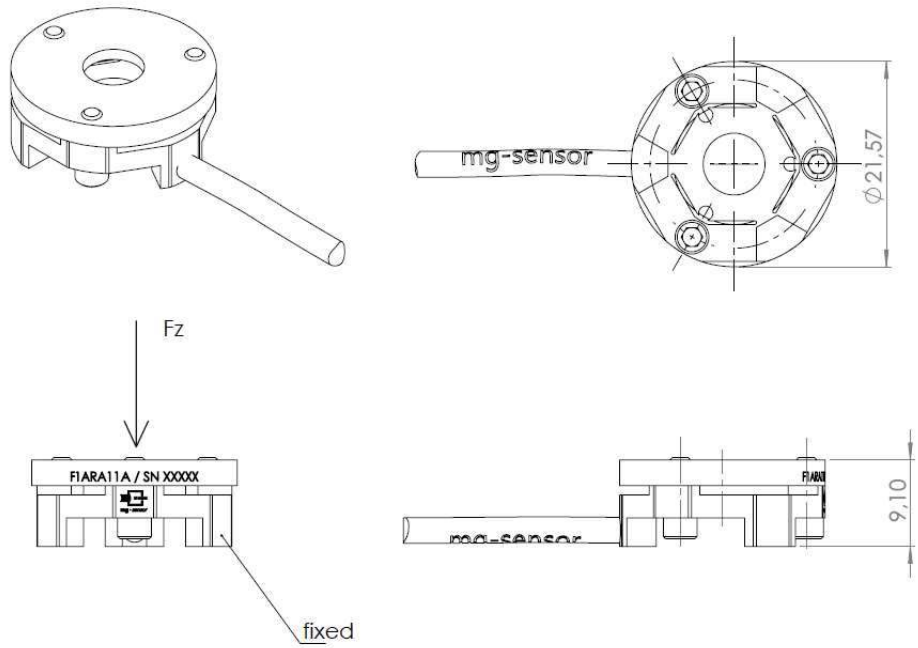

N6ALD11A

Dummy side view see page 99

Description	Load Cell, 6-axial Neck, Upper	
Measuring range *Fx/Fy/Fz* *Mx/My/Mz*	kN Nm	8,9/8,9/13,3 282/282/282
Sensitivity[1)] *Fx/Fy/Fz* *Mx/My/Mz*	µV/V/kN µV/V/Nm	225/225/90 6,0/6,0/9,6
Output signal[1), 2)] *Fx/Fy/Fz/Mx/My/Mz*	mV/V	2,0/2,0/1,2/1,7/1,7/2,7
Bridge resistance *Fx/Fy/Fz/Mx/My/Mz*	Ω	350/350/700/350/350/700
Zero signal[1)]	mV/V	≤ 0,05
Amplitude non-linearity[3)]	%	≤ 1,0
Hysteresis[3)]	%	≤ 1,0
Channel crosstalk[3)]	%	≤ 5,0
Supply voltage	V	2–15
Ultimate load	%	150
Insulation resistance	MΩ	> 100
Temperature range	°C	–30..+70
Weight (approximate)	g	600
Application	Thor	

All values measured at 10 V sensor supply voltage and at 23 °C.

[1)] Typical value, [2)] At nominal load, [3)] Relative nominal range

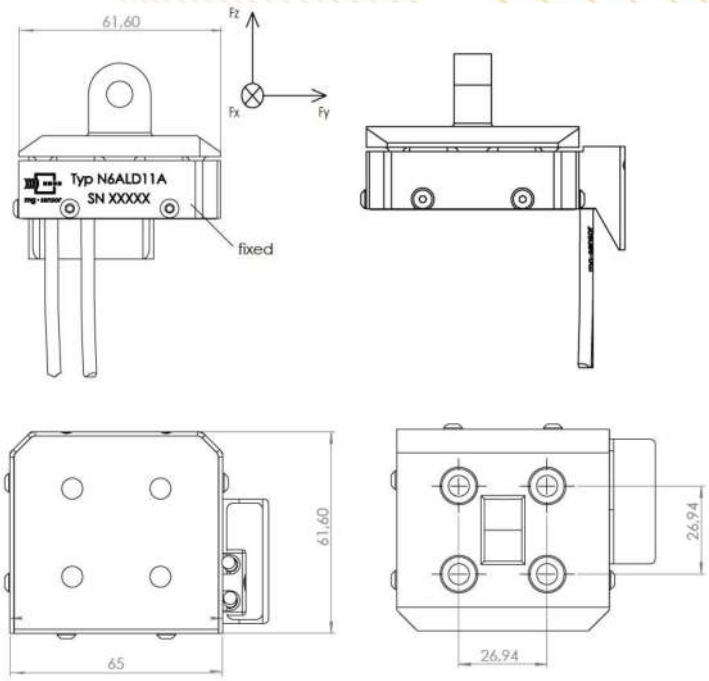

N6AKM11A

Dummy side view see page 99

Description	Load Cell, 6-axial Neck, Lower	
Measuring range *Fx/Fy/Fz* *Mx/My/Mz*	kN Nm	13,3/13,3/13,3 452/452/226
Sensitivity[1)] *Fx/Fy/Fz* *Mx/My/Mz*	µV/V/kN µV/V/Nm	173/173/75 4,0/4,0/6,6
Output signal[1), 2)] *Fx/Fy/Fz/Mx/My/Mz*	mV/V	2,3/2,3/1,0/1,8/1,8/1,5
Bridge resistance *Fx/Fy/Fz/Mx/My/Mz*	Ω	350/350/700/350/350/700
Zero signal[1)]	mV/V	≤ 0,05
Amplitude non-linearity[3)]	%	≤ 1,0
Hysteresis[3)]	%	≤ 1,0
Channel crosstalk[3)]	%	≤ 5,0
Supply voltage	V	2–15
Ultimate load	%	150
Insulation resistance	MΩ	> 100
Temperature range	°C	–30..+70
Weight (approximate)	g	1100
Application	Thor	

All values measured at 10 V sensor supply voltage and at 23 °C.

[1)] Typical value, [2)] At nominal load, [3)] Relative nominal range

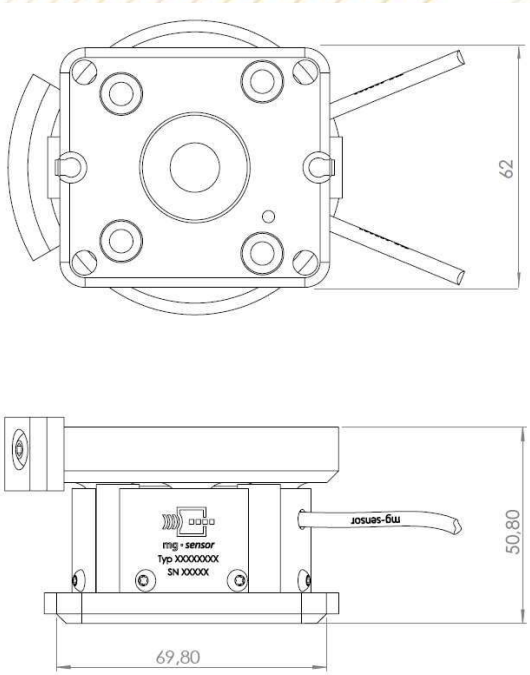

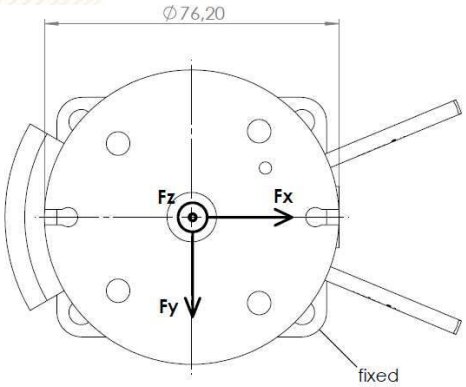

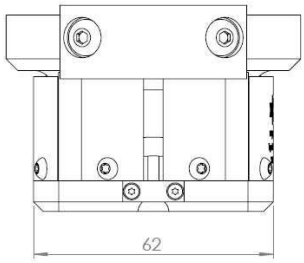

N5ASD11A

Dummy side view see page 99

Description	Load Cell, 5-axial Thoracic Spine	
Measuring range *Fx/Fy/Fz* *Mx/My*	kN Nm	13,3/13,3/17,8 678/904
Sensitivity[1)] *Fx/Fy/Fz* *Mx/My*	µV/V/kN µV/V/Nm	143/143/56 2,1/1,8
Output signal[1), 2)] *Fx/Fy/Fz/Mx/My*	mV/V	1,9/1,9/1,0/1,4/1,6
Bridge resistance *Fx/Fy/Fz/Mx/My*	Ω	350/350/1400/700/700
Zero signal[1)]	mV/V	≤ 0,05
Amplitude non-linearity[3)]	%	≤ 1,0
Hysteresis[3)]	%	≤ 1,0
Channel crosstalk[3)]	%	≤ 5,0
Supply voltage	V	2–15
Ultimate load	%	150
Insulation resistance	MΩ	> 100
Temperature range	°C	–30..+70
Weight (approximate)	g	1030
Application	Thor	

All values measured at 10 V sensor supply voltage and at 23 °C.

[1)] Typical value, [2)] At nominal load, [3)] Relative nominal range

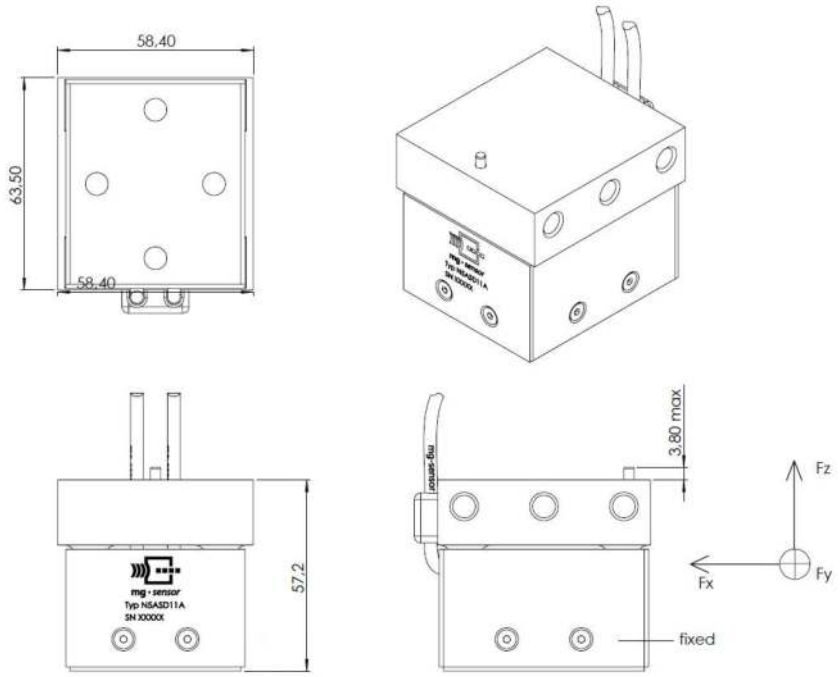

F3A3A11A

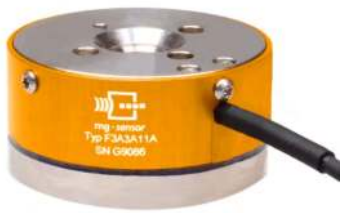

Dummy side view see page 99

Description	Load Cell, 3-axial Acetabulum left	
Measuring range *Fx/Fy/Fz*	kN	22,2/13,3/13,3
Sensitivity[1)] *Fx/Fy/Fz*	µV/V/kN	158/60/158
Output signal[1), 2)] *Fx/Fy/Fz*	mV/V	3,5/0,8/2,1
Bridge resistance *Fx/Fy/Fz*	Ω	350/700/350
Zero signal[1)]	mV/V	≤ 0,05
Amplitude non-linearity[3)]	%	≤ 1,0
Hysteresis[3)]	%	≤ 1,0
Channel crosstalk[3)]	%	≤ 5,0
Supply voltage	V	2–15
Ultimate load	%	150
Insulation resistance	MΩ	> 100
Temperature range	°C	–30..+70
Weight (approximate)	g	450
Application	Thor	

All values measured at 10 V sensor supply voltage and at 23 °C.

[1)] Typical value, [2)] At nominal load, [3)] Relative nominal range

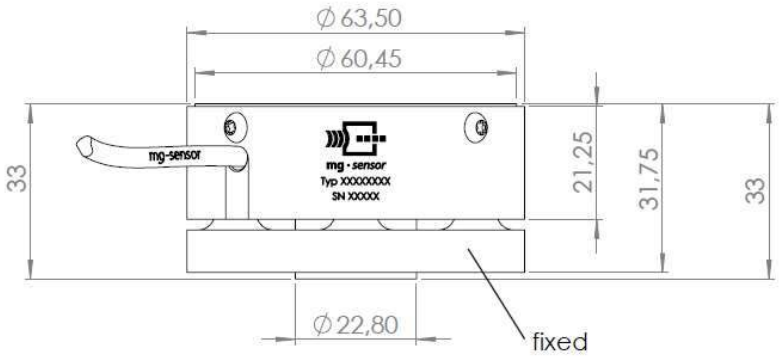

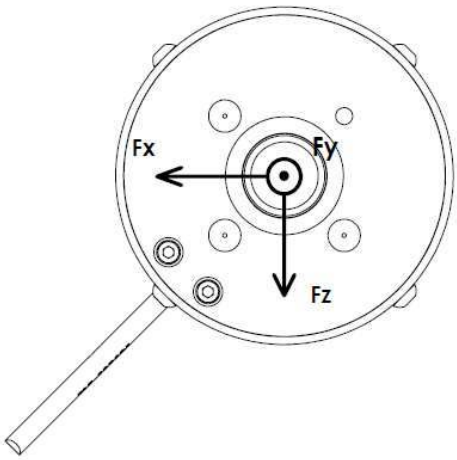

F3A3B11A

Dummy side view see page 99

Description	Load Cell, 3-axial Acetabulum right	
Measuring range *Fx/Fy/Fz*	kN	22,2/13,3/13,3
Sensitivity[1)] *Fx/Fy/Fz*	µV/V/kN	158/60/158
Output signal[1), 2)] *Fx/Fy/Fz*	mV/V	3,5/0,8/2,1
Bridge resistance *Fx/Fy/Fz*	Ω	350/700/350
Zero signal[1)]	mV/V	≤ 0,05
Amplitude non-linearity[3)]	%	≤ 1,0
Hysteresis[3)]	%	≤ 1,0
Channel crosstalk[3)]	%	≤ 5,0
Supply voltage	V	2–15
Ultimate load	%	150
Insulation resistance	MΩ	> 100
Temperature range	°C	–30..+70
Weight (approximate)	g	450
Application	Thor	

All values measured at 10 V sensor supply voltage and at 23 °C.

[1)] Typical value, [2)] At nominal load, [3)] Relative nominal range

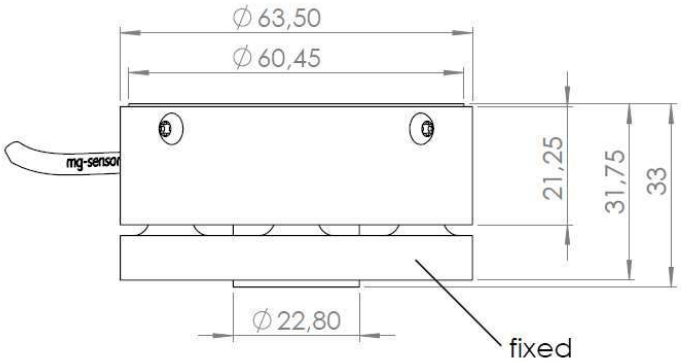

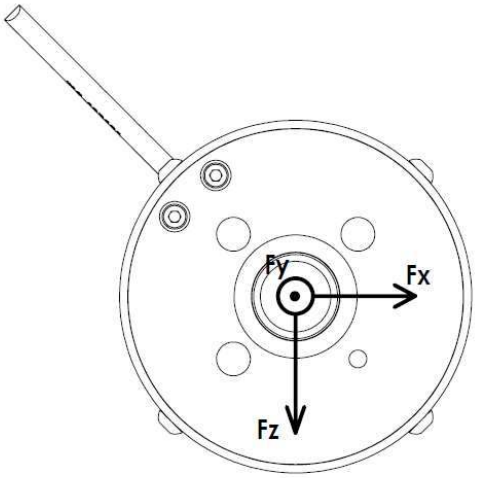

N5A3A11A

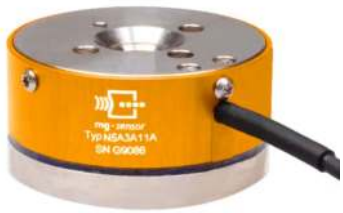

Dummy side view see page 99

Description	Load Cell, 5-axial Acetabulum left	
Measuring range *Fx/Fy/Fz* *Mx/My*	kN Nm	22,2/13,3/13,3 340/340
Sensitivity[1)] *Fx/Fy/Fz* *Mx/My*	µV/V/kN µV/V/Nm	162/60/158 4,4/4,4
Output signal[1), 2)] *Fx/Fy/Fz/Mx/My*	mV/V	3,6/0,8/2,1/1,5/1,5
Bridge resistance *Fx/Fy/Fz/Mx/My*	Ω	350/700/350/350/350
Zero signal[1)]	mV/V	≤ 0,05
Amplitude non-linearity[3)]	%	≤ 1,0
Hysteresis[3)]	%	≤ 1,0
Channel crosstalk[3)]	%	≤ 5,0
Supply voltage	V	2–15
Ultimate load	%	150
Insulation resistance	MΩ	> 100
Temperature range	°C	–30..+70
Weight (approximate)	g	450
Application	Thor	

All values measured at 10 V sensor supply voltage and at 23 °C.

[1)] Typical value, [2)] At nominal load, [3)] Relative nominal range

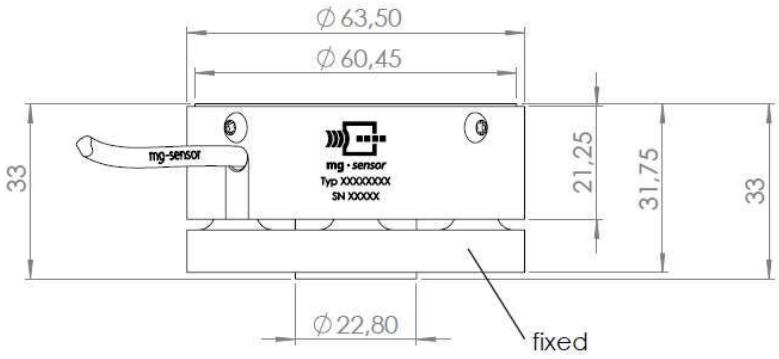

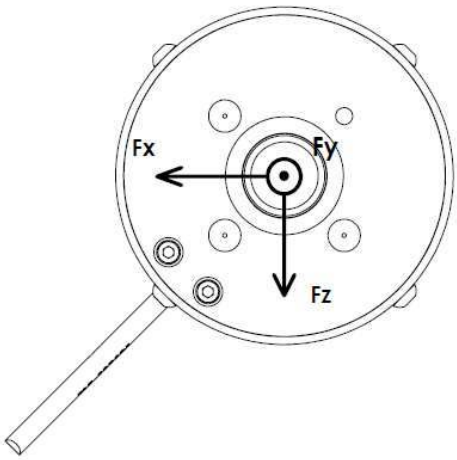

N5A3B11A

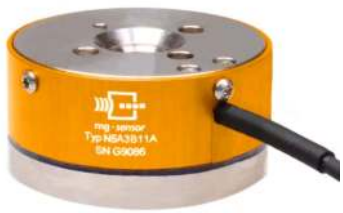

Dummy side view see page 99

Description	Load Cell, 5-axial Acetabulum right	
Measuring range *Fx/Fy/Fz* *Mx/My*	kN Nm	22,2/13,3/13,3 340/340
Sensitivity[1)] *Fx/Fy/Fz* *Mx/My*	µV/V/kN µV/V/Nm	162/60/158 4,4/4,4
Output signal[1), 2)] *Fx/Fy/Fz/Mx/My*	mV/V	3,6/0,8/2,1/1,5/1,5
Bridge resistance *Fx/Fy/Fz/Mx/My*	Ω	350/700/350/350/350
Zero signal[1)]	mV/V	≤ 0,05
Amplitude non-linearity[3)]	%	≤ 1,0
Hysteresis[3)]	%	≤ 1,0
Channel crosstalk[3)]	%	≤ 5,0
Supply voltage	V	2–15
Ultimate load	%	150
Insulation resistance	MΩ	> 100
Temperature range	°C	–30..+70
Weight (approximate)	g	450
Application	Thor	

All values measured at 10 V sensor supply voltage and at 23 °C.

[1)] Typical value, [2)] At nominal load, [3)] Relative nominal range

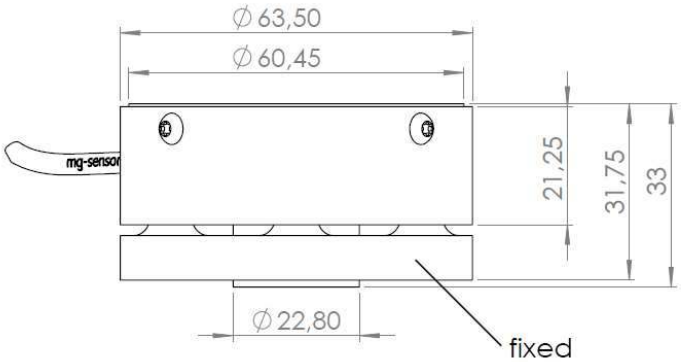

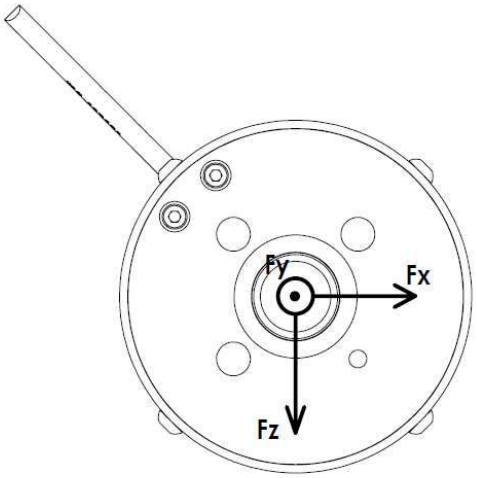

N6AGA10A

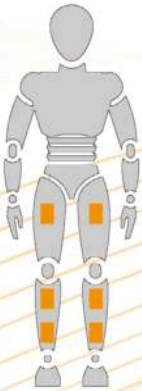

Dummy side view see page 99

Description	Load Cell, 6-axial Leg, Universal	
Measuring range *Fx/Fy/Fz* *Mx/My/Mz*	kN Nm	15/15/15 350/350/200
Sensitivity[1)] *Fx/Fy/Fz* *Mx/My/Mz*	µV/V/kN µV/V/Nm	166/166/100 8,3/8,3/16,5
Output signal[1), 2)] *Fx/Fy/Fz/Mx/My/Mz*	mV/V	2,5/2,5/1,5/2,9/2,9/3,0
Bridge resistance *Fx/Fy/Fz/Mx/My/Mz*	Ω	350/350/700/350/350/700
Zero signal[1)]	mV/V	≤ 0,05
Amplitude non-linearity[3)]	%	≤ 1,0
Hysteresis[3)]	%	≤ 1,0
Channel crosstalk[3)]	%	≤ 5,0
Supply voltage	V	2–15
Ultimate load	%	150
Insulation resistance	MΩ	> 100
Temperature range	°C	–30..+70
Weight (approximate)	g	480
Application	Thor, WorldSID-50%	

All values measured at 10 V sensor supply voltage and at 23 °C.

[1)] Typical value, [2)] At nominal load, [3)] Relative nominal range

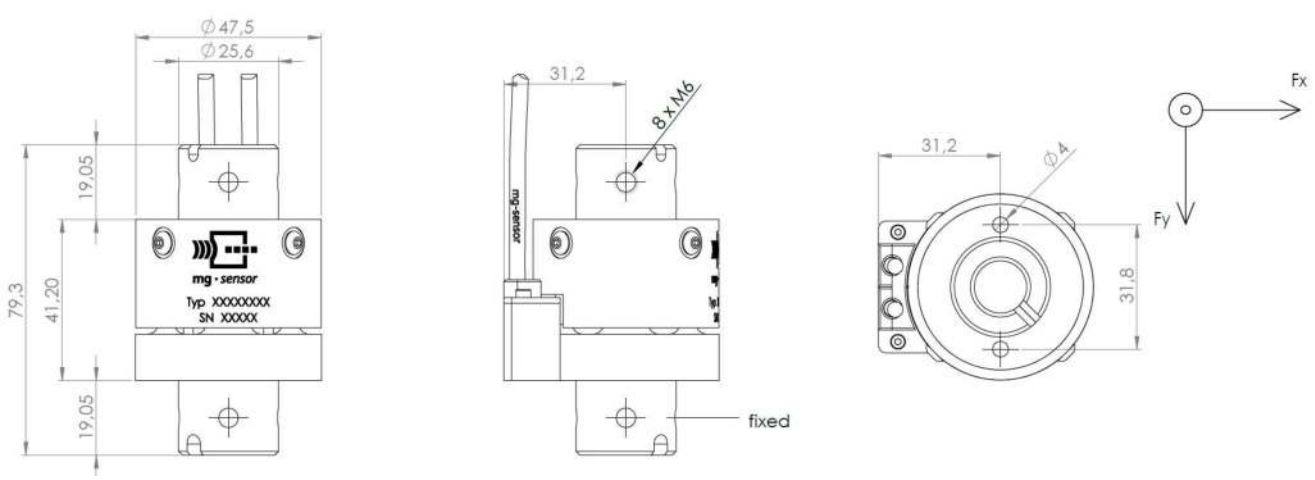

N6ACB11A

Dummy side view see page 99

Description	Load Cell, 6-axial Femur (with aluminum caps)*	
Measuring range *Fx/Fy/Fz* *Mx/My/Mz*	kN Nm	13,3/13,3/22,2 339/339/339
Sensitivity[1)] *Fx/Fy/Fz* *Mx/My/Mz*	µV/V/kN µV/V/Nm	135/135/54 4,4/4,4/7,7
Output signal[1), 2)] *Fx/Fy/Fz/Mx/My/Mz*	mV/V	1,8/1,8/1,2/1,5/1,5/2,6
Bridge resistance *Fx/Fy/Fz/Mx/My/Mz*	Ω	350/350/700/350/350/700
Zero signal[1)]	mV/V	≤ 0,05
Amplitude non-linearity[3)]	%	≤ 1,0
Hysteresis[3)]	%	≤ 1,0
Channel crosstalk[3)]	%	≤ 5,0
Supply voltage	V	2–15
Ultimate load	%	150
Insulation resistance	MΩ	> 100
Temperature range	°C	–30..+70
Weight (approximate)	g	850
Application	H2-50%, H3-Family, Thor, FAA, SID-Family	

All values measured at 10 V sensor supply voltage and at 23 °C.
[1)] Typical value, [2)] At nominal load, [3)] Relative nominal range

*likewise with steel caps (N6ACC11A) or without caps (N6ACF11A).

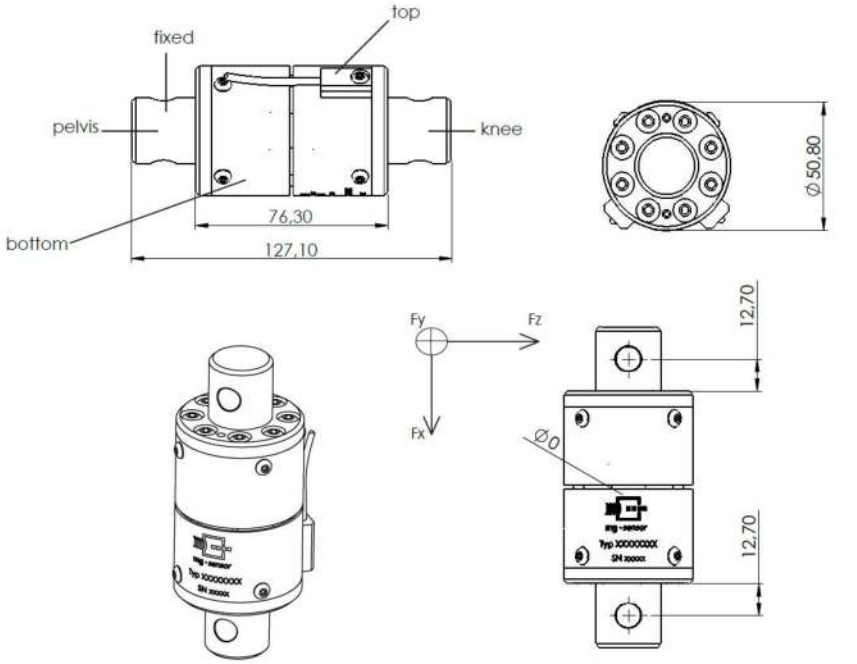

N5AUB11A

Dummy side view see page 99

Description	Load Cell, 5-axial Tibia, Upper	
Measuring range *Fx/Fy/Fz* *Mx/My*	kN Nm	11,1/11,1/11,1 395/395
Sensitivity[1)] *Fx/Fy/Fz* *Mx/My*	µV/V/kN µV/V/Nm	180/180/90 7,6/7,6
Output signal[1), 2)] *Fx/Fy/Fz/Mx/My*	mV/V	2,0/2,0/1,0/3,0/3,0
Bridge resistance *Fx/Fy/Fz/Mx/My*	Ω	350/350/700/350/350
Zero signal[1)]	mV/V	≤ 0,05
Amplitude non-linearity[3)]	%	≤ 1,0
Hysteresis[3)]	%	≤ 1,0
Channel crosstalk[3)]	%	≤ 5,0
Supply voltage	V	2–15
Ultimate load	%	150
Insulation resistance	MΩ	> 100
Temperature range	°C	–30..+70
Weight (approximate)	g	500
Application	Thor	

All values measured at 10 V sensor supply voltage and at 23 °C.

[1)] Typical value, [2)] At nominal load, [3)] Relative nominal range

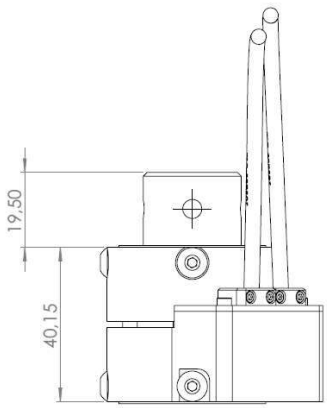

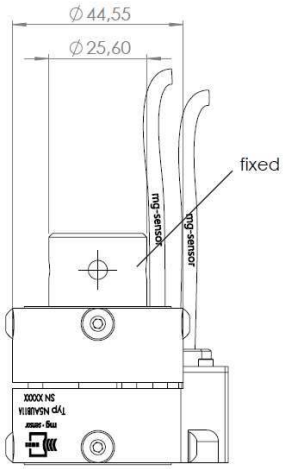

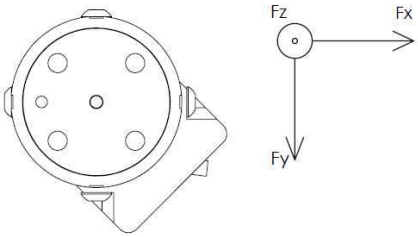

N5ATB11A

Dummy side view see page 99

Description	Load Cell, 5-axial Tibia, Lower	
Measuring range *Fx/Fy/Fz* *Mx/My*	kN Nm	11,1/11,1/11,1 395/395
Sensitivity[1)] *Fx/Fy/Fz* *Mx/My*	µV/V/kN µV/V/Nm	180/180/90 7,6/7,6
Output signal[1), 2)] *Fx/Fy/Fz/Mx/My*	mV/V	2,0/2,0/1,0/3,0/3,0
Bridge resistance *Fx/Fy/Fz/Mx/My*	Ω	350/350/700/350/350
Zero signal[1)]	mV/V	≤ 0,05
Amplitude non-linearity[3)]	%	≤ 1,0
Hysteresis[3)]	%	≤ 1,0
Channel crosstalk[3)]	%	≤ 5,0
Supply voltage	V	2–15
Ultimate load	%	150
Insulation resistance	MΩ	> 100
Temperature range	°C	–30..+70
Weight (approximate)	g	500
Application	Thor	

All values measured at 10 V sensor supply voltage and at 23 °C.
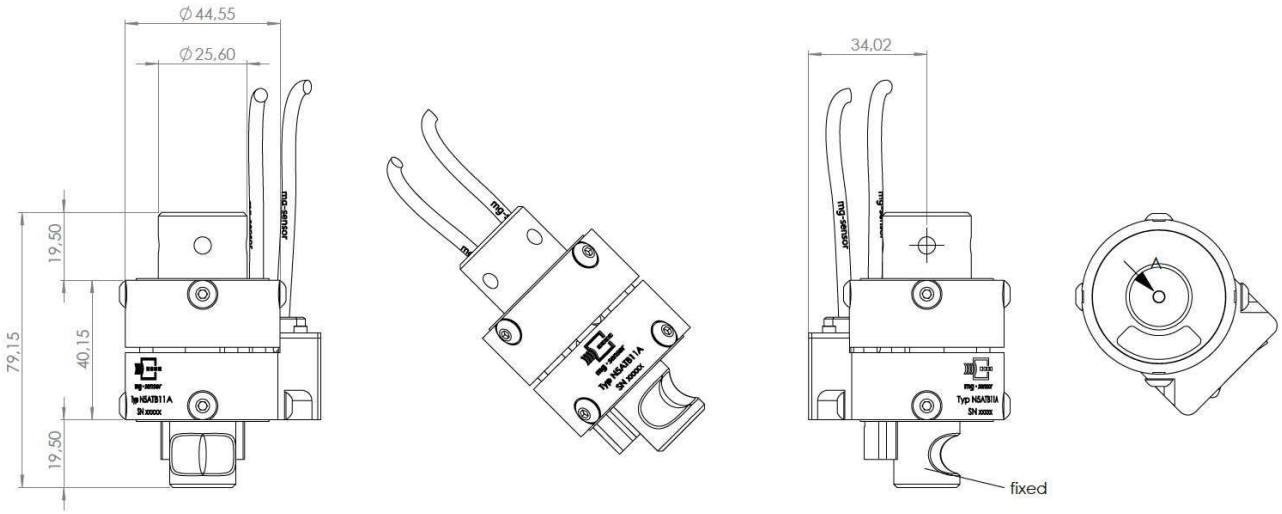
[1)] Typical value, [2)] At nominal load, [3)] Relative nominal range