Steering Column Load Cells

Location	Axial	Model*	Page
Steering Column	3	F3B3A10A	182
Steering Column	3	F3B3D50A	183
Steering Column	3	F3B3K10A	184
Steering Column	3	F3B3L11A	185
Steering Column	3	N3B3A10A	186
Steering Column	3	N3B3E10A	187
Steering Column	5	N5B3H11A	188

*additional versions available on request!

F3B3A10A

Description	Load Cell, 3-axial Steering Column	
Measuring range *Fx/Fy/Fz*	kN	10/10/20
Sensitivity[1] *Fx/Fy/Fz*	µV/V/kN	220/220/88
Output signal[1), 2)] *Fx/Fy/Fz*	mV/V	2,2/2,2/1,8
Bridge resistance *Fx/Fy/Fz*	Ω	350/350/700
Zero signal[1)]	mV/V	≤ 0,05
Amplitude non-linearity[3)]	%	≤ 1,0
Hysteresis[3)]	%	≤ 1,0
Channel crosstalk[3)]	%	≤ 5,0
Supply voltage	V	2–15
Ultimate load	%	150
Insulation resistance	MΩ	> 100
Temperature range	°C	–30..+70
Weight (approximate)	g	180

All values measured at 10 V sensor supply voltage and at 23 °C.

[1)] Typical value, [2)] At nominal load, [3)] Relative nominal range

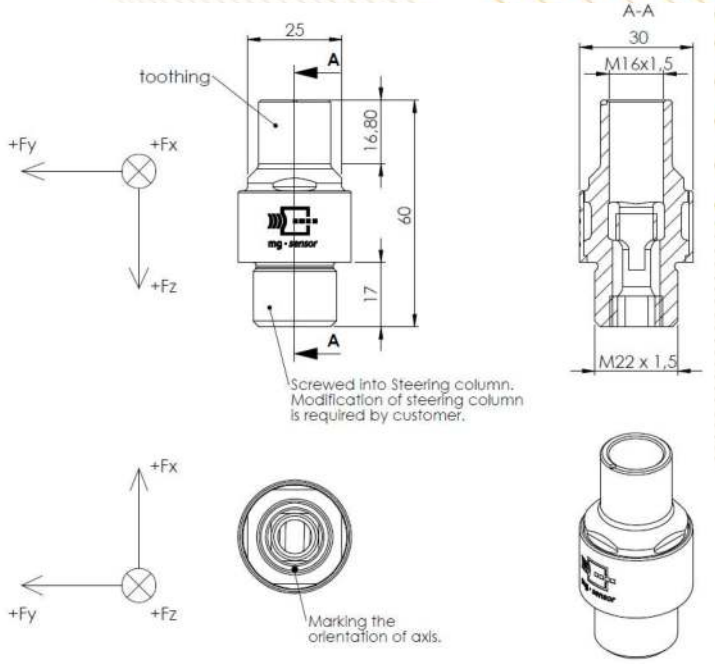

F3B3D50A

Description	Load Cell, 3-axial Steering Column	
Measuring range *Fx/Fy/Fz*	N	10000/10000/20000
Sensitivity[1)] *Fx/Fy/Fz*	Digits/N	1,0/1,0/1,0
Output signal[1), 2)] *Fx/Fy/Fz*	Digits	10000/10000/20000
Bridge resistance *Fx/Fy/Fz*	Ω	350/350/700
Zero signal[1)]	mV/V	≤ 0,05
Amplitude non-linearity[3)]	%	≤ 1,0
Hysteresis[3)]	%	≤ 1,0
Channel crosstalk[3)]	%	≤ 5,0
Supply voltage	V	2–15
Ultimate load	%	150
Insulation resistance	MΩ	> 100
Temperature range	°C	–30..+70
Weight (approximate)	g	-

All values measured at 10 V sensor supply voltage and at 23 °C.

[1)] Typical value, [2)] At nominal load, [3)] Relative nominal range

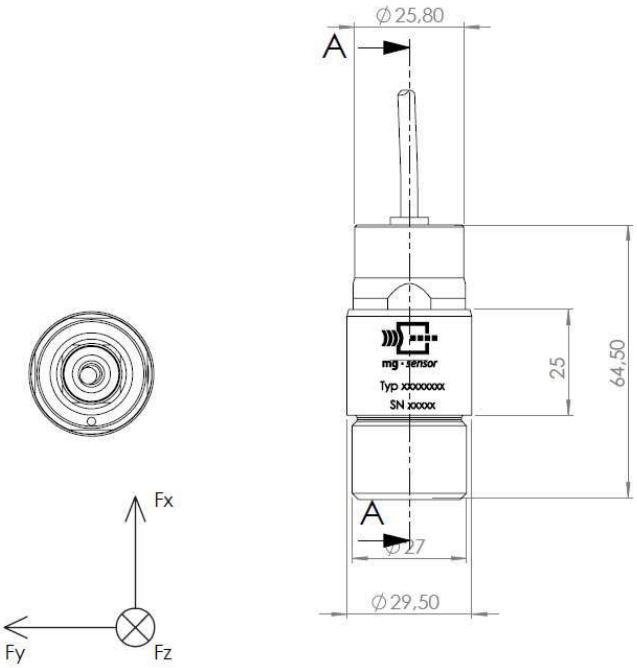

F3B3K10A

Description	Load Cell, 3-axial Steering Column	
Measuring range *Fx/Fy/Fz*	kN	20/20/20
Sensitivity[1] *Fx/Fy/Fz*	µV/V/kN	120/120/55
Output signal[1), 2)] *Fx/Fy/Fz*	mV/V	2,4/2,4/1,1
Bridge resistance *Fx/Fy/Fz*	Ω	350/350/700
Zero signal[1)]	mV/V	≤ 0,05
Amplitude non-linearity[3)]	%	≤ 1,0
Hysteresis[3)]	%	≤ 1,0
Channel crosstalk[3)]	%	≤ 5,0
Supply voltage	V	2–15
Ultimate load	%	150
Insulation resistance	MΩ	> 100
Temperature range	°C	–30..+70
Weight (approximate)	g	180

All values measured at 10 V sensor supply voltage and at 23 °C.

[1)] Typical value, [2)] At nominal load, [3)] Relative nominal range

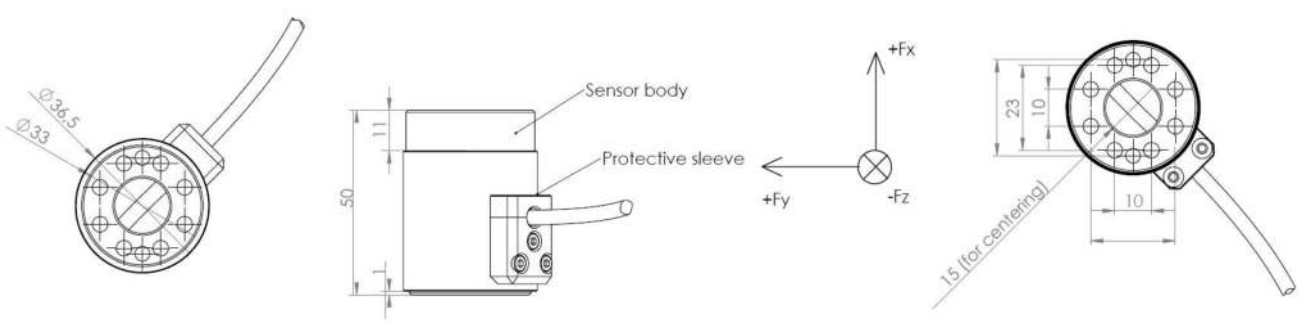

F3B3L11A

Description	Load Cell, 3-axial Steering Column	
Measuring range *Fx/Fy/Fz*	kN	25/10/10
Sensitivity[1] *Fx/Fy/Fz*	µV/V/kN	44/140/140
Output signal[1), 2)] *Fx/Fy/Fz*	mV/V	1,1/1,4/1,4
Bridge resistance *Fx/Fy/Fz*	Ω	700/350/350
Zero signal[1)]	mV/V	≤ 0,05
Amplitude non-linearity[3)]	%	≤ 1,0
Hysteresis[3)]	%	≤ 1,0
Channel crosstalk[3)]	%	≤ 5,0
Supply voltage	V	2–15
Ultimate load	%	150
Insulation resistance	MΩ	> 100
Temperature range	°C	–30..+70
Weight (approximate)	g	650

All values measured at 10 V sensor supply voltage and at 23 °C.

[1)] Typical value, [2)] At nominal load, [3)] Relative nominal range

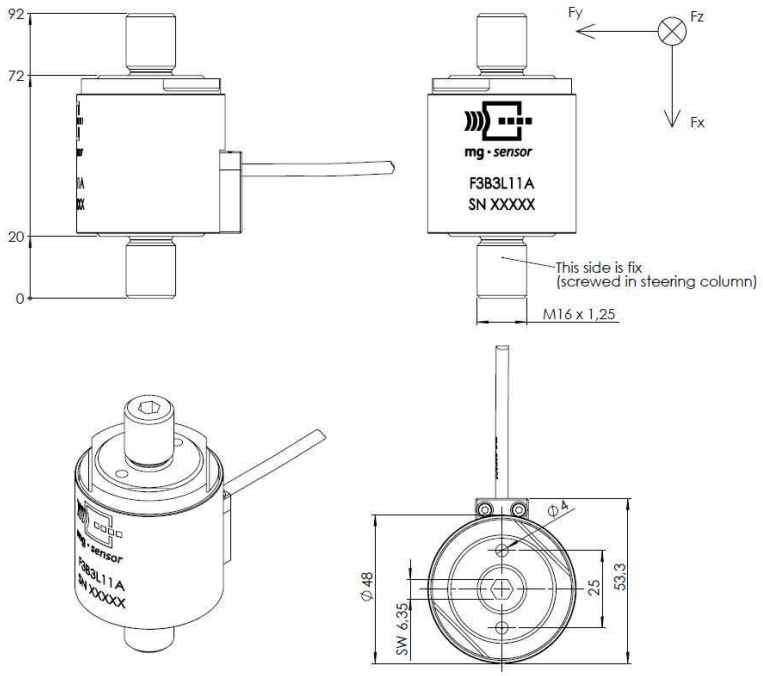

N3B3A10A

Description	Load Cell, 3-axial Steering Column	
Measuring range *Fz* *Mx/My*	kN Nm	20 200/200
Sensitivity[1)] *Fz* *Mx/My*	µV/V/kN µV/V/Nm	88 10/10
Output signal[1), 2)] *Fz/Mx/My*	mV/V	1,8/2,0/2,0
Bridge resistance *Fz/Mx/My*	Ω	700/350/350
Zero signal[1)]	mV/V	≤ 0,05
Amplitude non-linearity[3)]	%	≤ 1,0
Hysteresis[3)]	%	≤ 1,0
Channel crosstalk[3)]	%	≤ 5,0
Supply voltage	V	2–15
Ultimate load	%	150
Insulation resistance	MΩ	> 100
Temperature range	°C	–30..+70
Weight (approximate)	g	180

All values measured at 10 V sensor supply voltage and at 23 °C.

[1)] Typical value, [2)] At nominal load, [3)] Relative nominal range

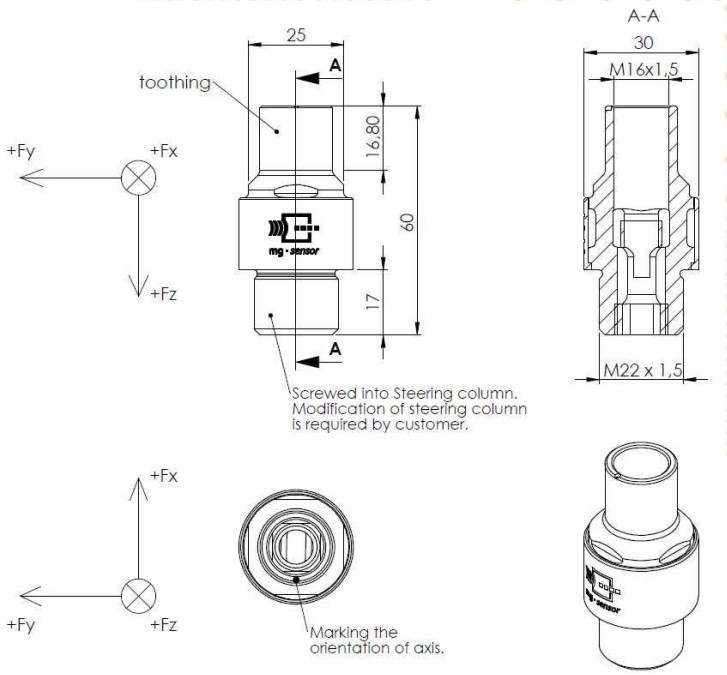

N3B3E10A

Description	Load Cell, 3-axial Steering Column	
Measuring range *Fx* *My/Mz*	kN Nm	20 150/150
Sensitivity[1)] *Fx* *My/Mz*	µV/V/kN µV/V/Nm	90 12,5/12,5
Output signal[1), 2)] *Fx/My/Mz*	mV/V	1,8/1,9/1,9
Bridge resistance *Fx/My/Mz*	Ω	700/350/350
Zero signal[1)]	mV/V	≤ 0,05
Amplitude non-linearity[3)]	%	≤ 1,0
Hysteresis[3)]	%	≤ 1,0
Channel crosstalk[3)]	%	≤ 5,0
Supply voltage	V	2–15
Ultimate load	%	150
Insulation resistance	MΩ	> 100
Temperature range	°C	–30..+70
Weight (approximate)	g	120

All values measured at 10 V sensor supply voltage and at 23 °C.

[1)] Typical value, [2)] At nominal load, [3)] Relative nominal range

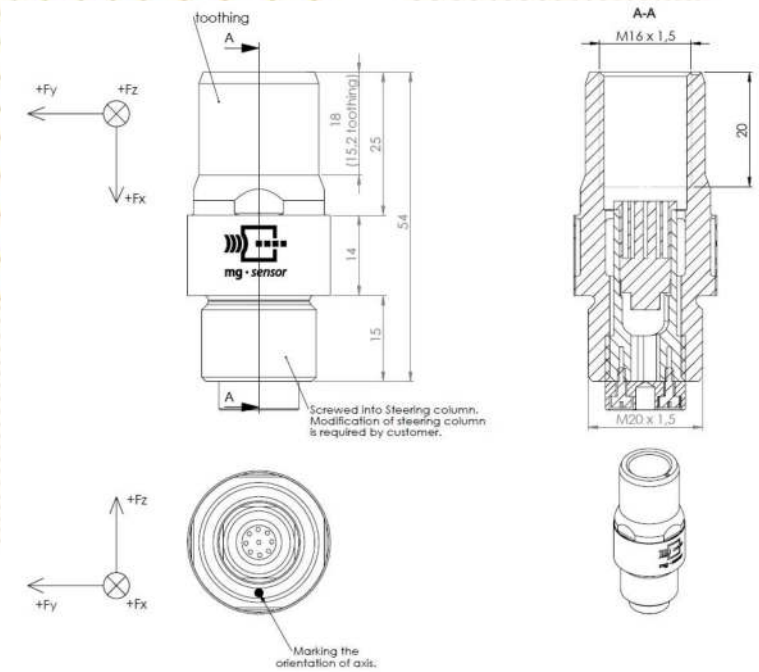

N5B3H11A

Description	Load Cell, 5-axial Steering Column	
Measuring range *Fx/Fy/Fz* *Mx/Mz*	kN Nm	20/10/10 200/200
Sensitivity[1)] *Fx/Fy/Fz* *Mx/Mz*	µV/V/kN µV/V/Nm	95/200/200 11,5/11,5
Output signal[1), 2)] *Fx/Fy/Fz/Mx/Mz*	mV/V	1,9/2,0/2,0/2,3/2,3
Bridge resistance *Fx/Fy/Fz/Mx/Mz*	Ω	700/350/350/350/350
Zero signal[1)]	mV/V	≤ 0,05
Amplitude non-linearity[3)]	%	≤ 1,0
Hysteresis[3)]	%	≤ 1,0
Channel crosstalk[3)]	%	≤ 5,0
Supply voltage	V	2–15
Ultimate load	%	150
Insulation resistance	MΩ	> 100
Temperature range	°C	–30..+70
Weight (approximate)	g	200

All values measured at 10 V sensor supply voltage and at 23 °C.
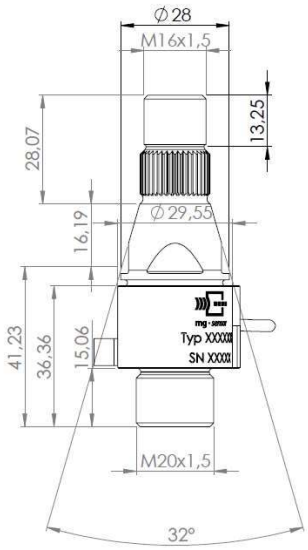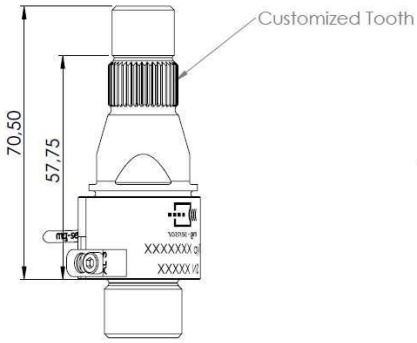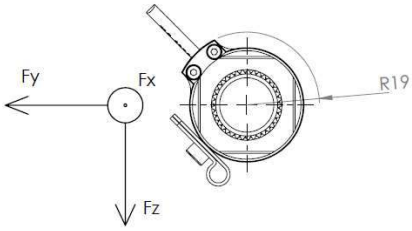
[1)] Typical value, [2)] At nominal load, [3)] Relative nominal range