Dummy SIDIIs

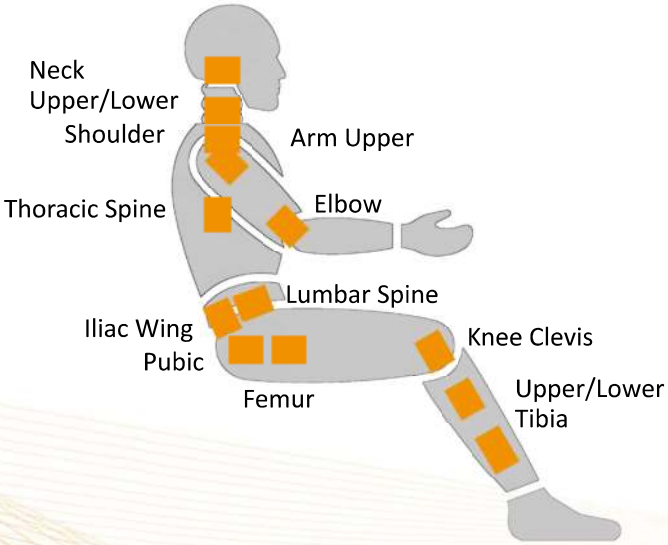

Location	Axial	Model*	Page
Neck	4	N4ALA11A	113
Neck, Upper	6	N6ALB11A	114
Neck, Lower	6	N6AKA10A; N6AKK11A	115
Neck, Lower	6	N6AKP11A	on request
Shoulder	3	F3AQE11A	117
Arm, Upper	6	N6AYA11A	on request
Elbow	2	M2AAA11A	on request
Lumbar Spine	6	N6AIB11A	118
Iliac Wing	1	F1AFA10A	119
Acetabulum	1	F1A3A10A	120
Pubic	1	F1ANA11A	121
Femur	1	F1ACC10A;F1ACD10A; F1ACE10A	on request
Femur	6	N6ACB11A	122
Femur	6	N6ACC11A; N6ACF11A	on request
Knee Clevis	2	F2A9B11A	123
Tibia, Upper	5	N5AUA11A	124
Tibia, Lower	4	N4ATB11A	on request
Tibia, Lower	5	N5ATA11A	125

*additional versions available on request!

N4ALA11A

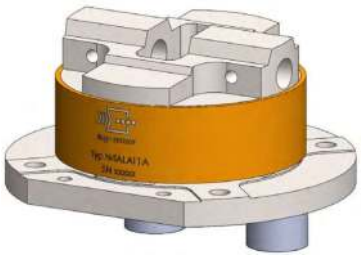

Dummy side view see page 137

Description	Load Cell, 4-axial Neck	
Measuring range *Fx/Fy/Fz* *My*	kN Nm	8,9/8,9/13,3 282
Sensitivity[1)] *Fx/Fy/Fz* *My*	µV/V/kN µV/V/Nm	180/180/90 5,7
Output signal[1), 2)] *Fx/Fy/Fz/My*	mV/V	1,6/1,6/1,2/1,6
Bridge resistance *Fx/Fy/Fz/My*	Ω	350/350/700/350
Zero signal[1)]	mV/V	≤ 0,05
Amplitude non-linearity[3)]	%	≤ 1,0
Hysteresis[3)]	%	≤ 1,0
Channel crosstalk[3)]	%	≤ 5,0
Supply voltage	V	2–15
Ultimate load	%	150
Insulation resistance	MΩ	> 100
Temperature range	°C	–30..+70
Weight (approximate)	g	630
Application	H3-Family, SIDIIs, BioSID, H3-6YO	

All values measured at 10 V sensor supply voltage and at 23 °C.

[1)] Typical value, [2)] At nominal load, [3)] Relative nominal range

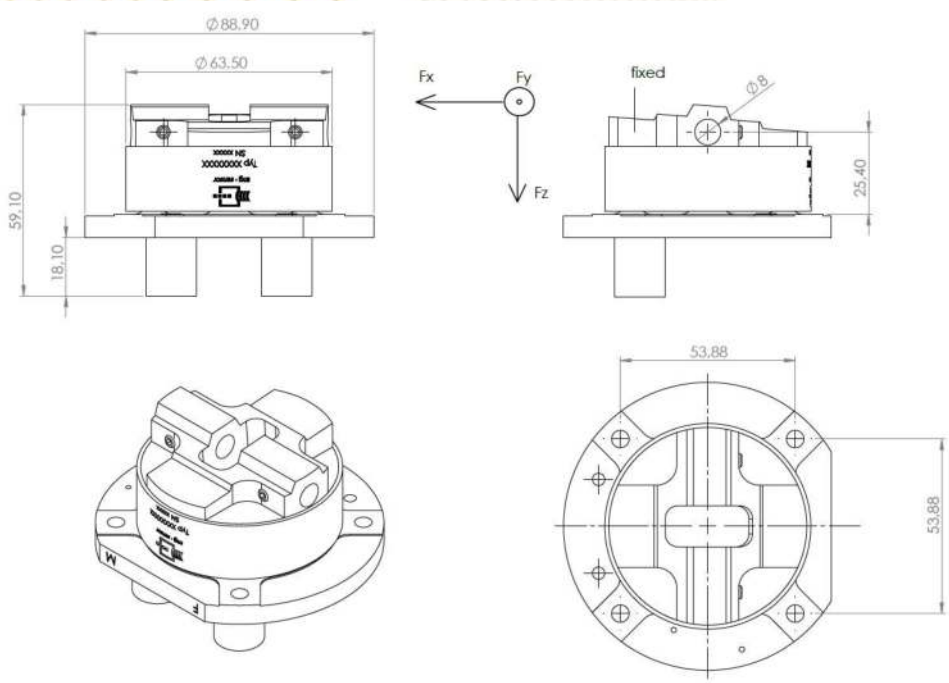

N6ALB11A

Dummy side view see page 137

Description	Load Cell, 6-axial Neck, Upper	
Measuring range *Fx/Fy/Fz* *Mx/My/Mz*	kN Nm	8,9/8,9/13,3 282/282/282
Sensitivity[1)] *Fx/Fy/Fz* *Mx/My/Mz*	µV/V/kN µV/V/Nm	191/191/105 6,0/6,0/8,2
Output signal[1), 2)] *Fx/Fy/Fz/Mx/My/Mz*	mV/V	1,7/1,7/1,4/1,7/1,7/2,3
Bridge resistance *Fx/Fy/Fz/Mx/My/Mz*	Ω	350/350/700/350/350/700
Zero signal[1)]	mV/V	≤ 0,05
Amplitude non-linearity[3)]	%	≤ 1,0
Hysteresis[3)]	%	≤ 1,0
Channel crosstalk[3)]	%	≤ 5,0
Supply voltage	V	2–15
Ultimate load	%	150
Insulation resistance	MΩ	> 100
Temperature range	°C	–30..+70
Weight (approximate)	g	680
Application	H3-Family, FAA, SIDIIs, BioSID, H3-6YO, H3-10YO	

All values measured at 10 V sensor supply voltage and at 23 °C.

[1)] Typical value, [2)] At nominal load, [3)] Relative nominal range

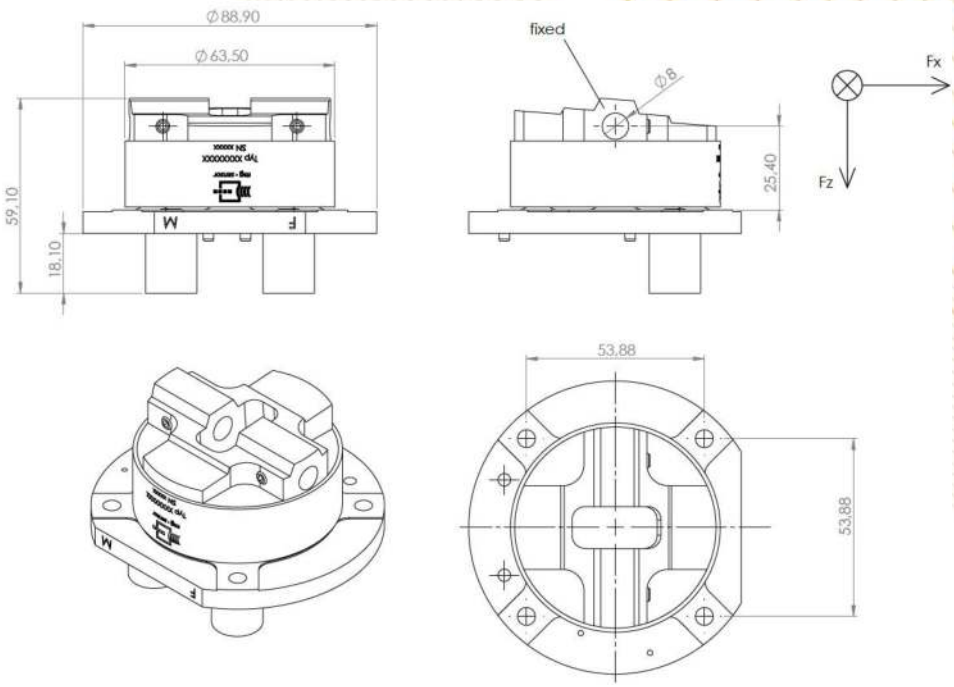

N6AKA10A

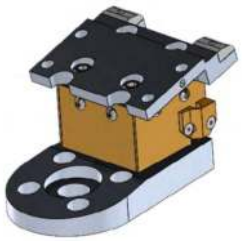

Dummy side view see page 137

Description	Load Cell, 6-axial Neck, Lower	
Measuring range *Fx/Fy/Fz* *Mx/My/Mz*	kN Nm	13,3/13,3/13,3 452/452/339
Sensitivity[1)] *Fx/Fy/Fz* *Mx/My/Mz*	µV/V/kN µV/V/Nm	165/165/90 4,4/4,4/5,9
Output signal[1), 2)] *Fx/Fy/Fz/Mx/My/Mz*	mV/V	2,2/2,2/1,2/2,0/2,0/2,0
Bridge resistance *Fx/Fy/Fz/Mx/My/Mz*	Ω	350/350/700/700/700/350
Zero signal[1)]	mV/V	≤ 0,05
Amplitude non-linearity[3)]	%	≤ 1,0
Hysteresis[3)]	%	≤ 1,0
Channel crosstalk[3)]	%	≤ 5,0
Supply voltage	V	2–15
Ultimate load	%	150
Insulation resistance	MΩ	> 100
Temperature range	°C	–30..+70
Weight (approximate)	g	540
Application	SIDIIs	

All values measured at 10 V sensor supply voltage and at 23 °C.

[1)] Typical value, [2)] At nominal load, [3)] Relative nominal range

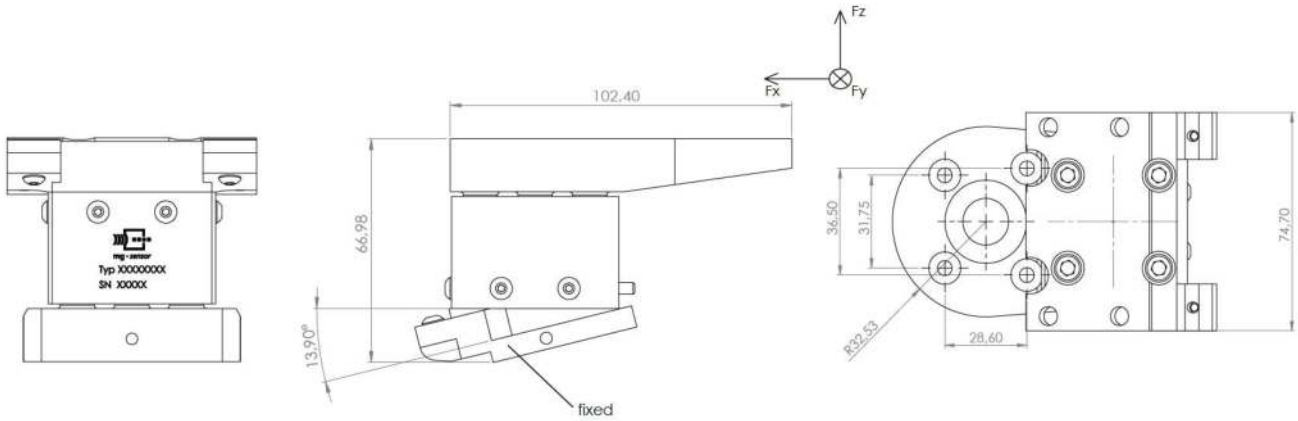

N6AKK11A

Dummy side view see page 137

Description	Load Cell, 6-axial Neck, Lower	
Measuring range *Fx/Fy/Fz* *Mx/My/Mz*	kN Nm	13,5/13,5/13,5 450/450/340
Sensitivity[1)] *Fx/Fy/Fz* *Mx/My/Mz*	µV/V/kN µV/V/Nm	163/163/44 3,6/3,6/4,7
Output signal[1), 2)] *Fx/Fy/Fz/Mx/My/Mz*	mV/V	2,2/2,2/0,6/1,6/1,8/1,6
Bridge resistance *Fx/Fy/Fz/Mx/My/Mz*	Ω	350/350/1400/700/700/350
Zero signal[1)]	mV/V	≤ 0,05
Amplitude non-linearity[3)]	%	≤ 1,0
Hysteresis[3)]	%	≤ 1,0
Channel crosstalk[3)]	%	≤ 5,0
Supply voltage	V	2–15
Ultimate load	%	150
Insulation resistance	MΩ	> 100
Temperature range	°C	–30..+70
Weight (approximate)	g	640
Application	SIDIIs	

All values measured at 10 V sensor supply voltage and at 23 °C.

[1)] Typical value, [2)] At nominal load, [3)] Relative nominal range

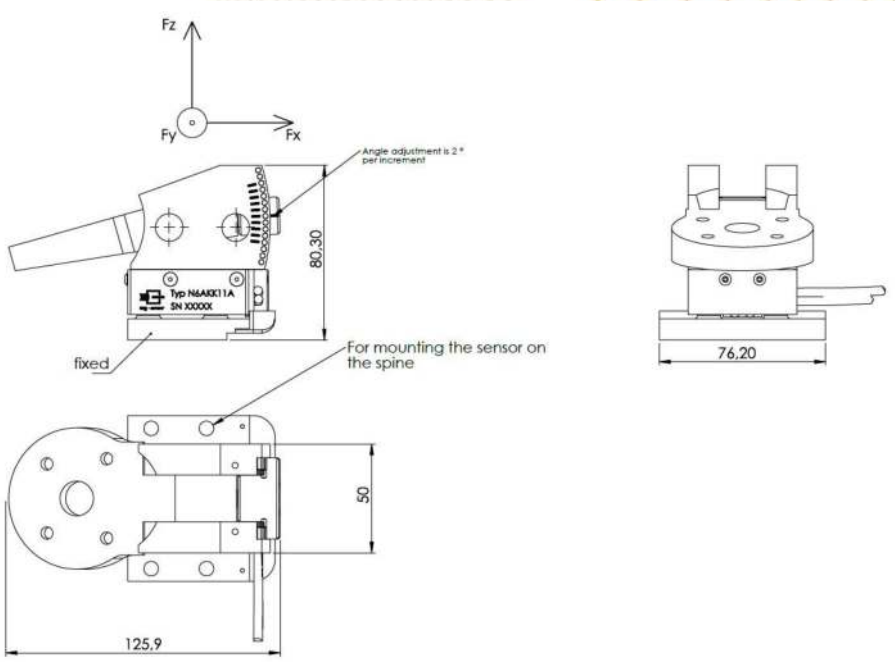

F3AQE11A

Dummy side view see page 137

Description	Load Cell, 3-axial Shoulder	
Measuring range *Fx/Fy/Fz*	kN	4,4/4,4/4,4
Sensitivity[1] *Fx/Fy/Fz*	µV/V/kN	523/227/523
Output signal[1), 2)] *Fx/Fy/Fz*	mV/V	2,3/1,0/2,3
Bridge resistance *Fx/Fy/Fz*	Ω	350/350/700
Zero signal[1]	mV/V	≤ 0,05
Amplitude non-linearity[3]	%	≤ 1,0
Hysteresis[3]	%	≤ 1,0
Channel crosstalk[3]	%	≤ 5,0
Supply voltage	V	2–15
Ultimate load	%	150
Insulation resistance	MΩ	> 100
Temperature range	°C	–30..+70
Weight (approximate)	g	60
Application	SIDIIs	

All values measured at 10 V sensor supply voltage and at 23 °C.
[1] Typical value, [2] At nominal load, [3] Relative nominal range

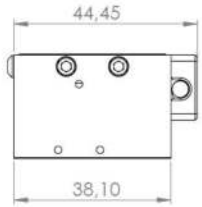

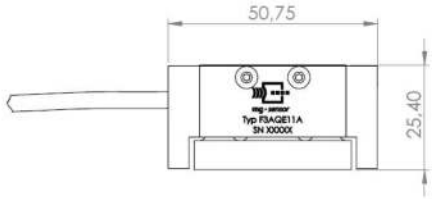

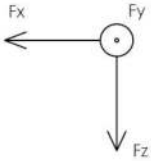

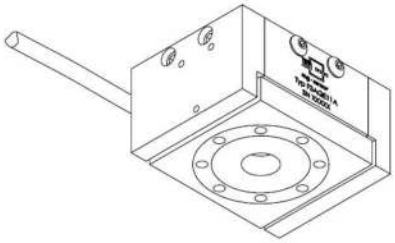

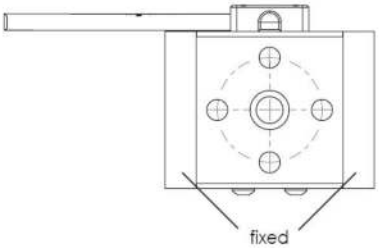

Polarity indication for use as left shoulder (cable outlet pointing upwards)

N6AIB11A

Dummy side view see page 137

Description	Load Cell, 6-axial Lumbar Spine	
Measuring range *Fx/Fy/Fz* *Mx/My/Mz*	kN Nm	13,3/13,3/13,3 452/452/226
Sensitivity[1)] *Fx/Fy/Fz* *Mx/My/Mz*	µV/V/kN µV/V/Nm	150/150/90 6,7/6,7/12
Output signal[1), 2)] *Fx/Fy/Fz/Mx/My/Mz*	mV/V	2,0/2,0/1,2/3,0/3,0/2,7
Bridge resistance *Fx/Fy/Fz/Mx/My/Mz*	Ω	350/350/700/350/350/700
Zero signal[1)]	mV/V	≤ 0,05
Amplitude non-linearity[3)]	%	≤ 1,0
Hysteresis[3)]	%	≤ 1,0
Channel crosstalk[3)]	%	≤ 5,0
Supply voltage	V	2–15
Ultimate load	%	150
Insulation resistance	MΩ	> 100
Temperature range	°C	–30..+70
Weight (approximate)	g	1600
Application	SIDIIs	

All values measured at 10 V sensor supply voltage and at 23 °C.

[1)] Typical value, [2)] At nominal load, [3)] Relative nominal range

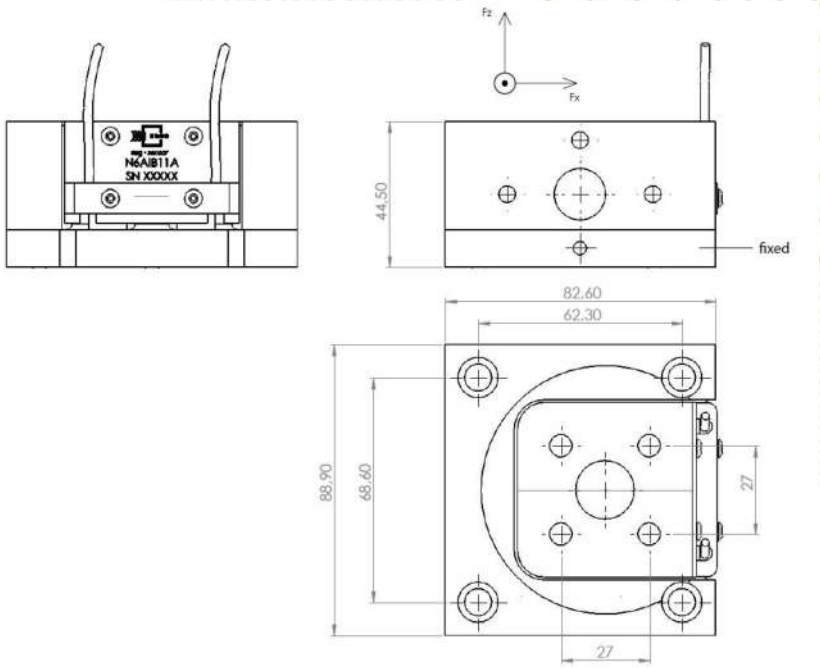

F1AFA10A

Dummy side view see page 137

Description	Load Cell, 1-axial Iliac Wing	
Measuring range *Fy*	kN	13,3
Sensitivity[1)] *Fy*	µV/V/kN	150
Output signal[1), 2)] *Fy*	mV/V	2,0
Bridge resistance *Fy*	Ω	350
Zero signal[1)]	mV/V	≤ 0,05
Amplitude non-linearity[3)]	%	≤ 1,0
Hysteresis[3)]	%	≤ 1,0
Channel crosstalk[3)]	%	-
Supply voltage	V	2–15
Ultimate load	%	150
Insulation resistance	MΩ	> 100
Temperature range	°C	–30..+70
Weight (approximate)	g	300
Application	SIDIIs	

All values measured at 10 V sensor supply voltage and at 23 °C.

[1)] Typical value, [2)] At nominal load, [3)] Relative nominal range

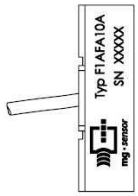

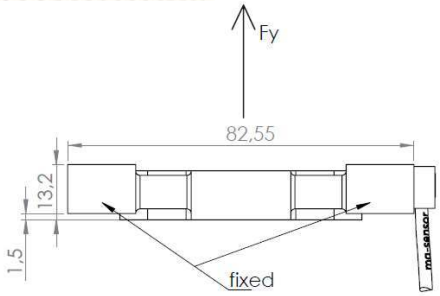

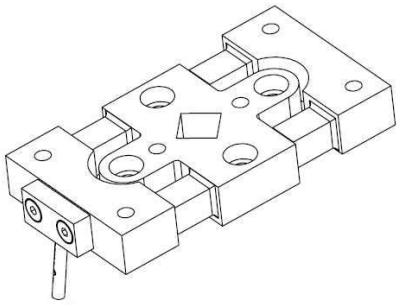

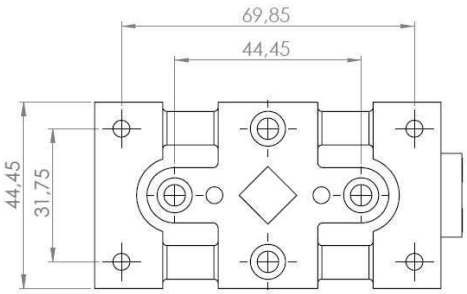

F1A3A10A

Dummy side view see page 137

Description	Load Cell, 1-axial Acetabulum	
Measuring range *Fy*	kN	8,9
Sensitivity[1] *Fy*	µV/V/kN	225
Output signal[1), 2)] *Fy*	mV/V	2,0
Bridge resistance *Fy*	Ω	700
Zero signal[1)]	mV/V	≤ 0,05
Amplitude non-linearity[3)]	%	≤ 1,0
Hysteresis[3)]	%	≤ 1,0
Channel crosstalk[3)]	%	-
Supply voltage	V	2–15
Ultimate load	%	150
Insulation resistance	MΩ	> 100
Temperature range	°C	–30..+70
Weight (approximate)	g	140
Application	SIDIIs	

All values measured at 10 V sensor supply voltage and at 23 °C.

[1)] Typical value, [2)] At nominal load, [3)] Relative nominal range

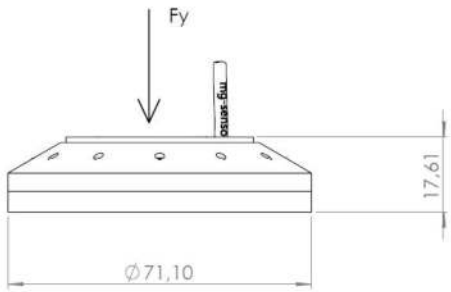

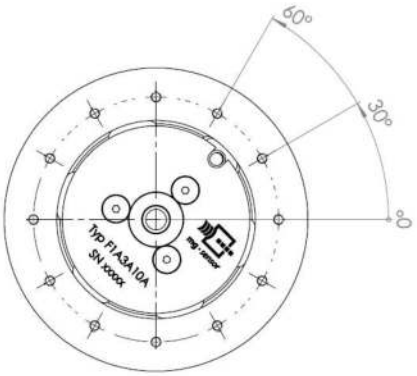

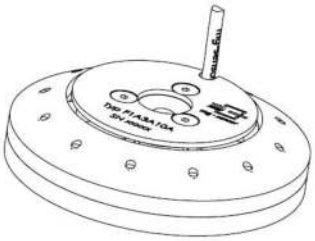

F1ANA11A

Dummy side view see page 137

Description	Load Cell, 1-axial Pubic	
Measuring range *Fy*	kN	8,9
Sensitivity[1)] *Fy*	µV/V/kN	146
Output signal[1), 2)] *Fy*	mV/V	1,3
Bridge resistance *Fy*	Ω	700
Zero signal[1)]	mV/V	≤ 0,05
Amplitude non-linearity[3)]	%	≤ 1,0
Hysteresis[3)]	%	≤ 1,0
Channel crosstalk[3)]	%	-
Supply voltage	V	2–15
Ultimate load	%	150
Insulation resistance	MΩ	> 100
Temperature range	°C	–30..+70
Weight (approximate)	g	200
Application	SIDIIs	

All values measured at 10 V sensor supply voltage and at 23 °C.
[1)] Typical value, [2)] At nominal load, [3)] Relative nominal range

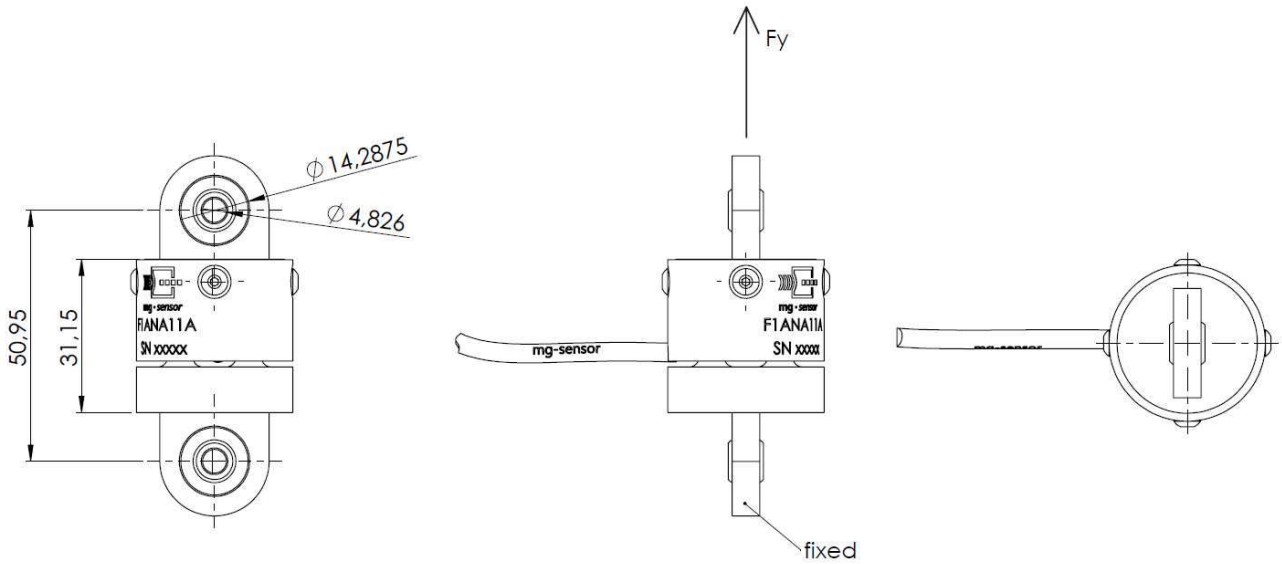

N6ACB11A

Dummy side view see page 137

Description	Load Cell, 6-axial Femur (with aluminum caps)*	
Measuring range *Fx/Fy/Fz* *Mx/My/Mz*	kN Nm	13,3/13,3/22,2 339/339/339
Sensitivity[1)] *Fx/Fy/Fz* *Mx/My/Mz*	µV/V/kN µV/V/Nm	135/135/54 4,4/4,4/7,7
Output signal[1), 2)] *Fx/Fy/Fz/Mx/My/Mz*	mV/V	1,8/1,8/1,2/1,5/1,5/2,6
Bridge resistance *Fx/Fy/Fz/Mx/My/Mz*	Ω	350/350/700/350/350/700
Zero signal[1)]	mV/V	≤ 0,05
Amplitude non-linearity[3)]	%	≤ 1,0
Hysteresis[3)]	%	≤ 1,0
Channel crosstalk[3)]	%	≤ 5,0
Supply voltage	V	2–15
Ultimate load	%	150
Insulation resistance	MΩ	> 100
Temperature range	°C	–30..+70
Weight (approximate)	g	850
Application	H2-50%, H3-Family, Thor, FAA, SID-Family	

All values measured at 10 V sensor supply voltage and at 23 °C.
[1)] Typical value, [2)] At nominal load, [3)] Relative nominal range

*likewise with steel caps (N6ACC11A) or without caps (N6ACF11A).

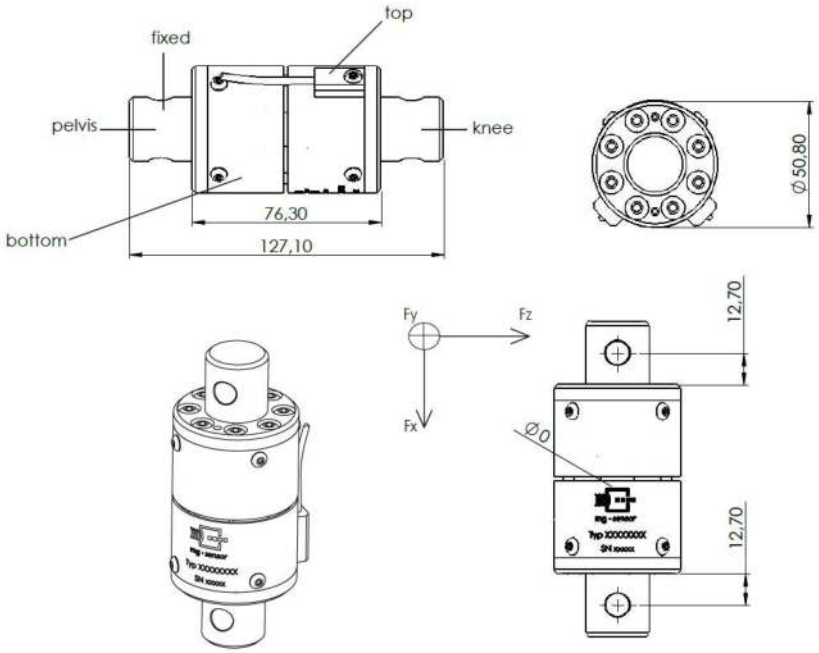

F2A9B11A

Dummy side view see page 137

Description	Load Cell, 2-axial Knee Clevis	
Measuring range Fz_L/Fz_R	kN	6,7/6,7
Sensitivity[1)] Fz_L/Fz_R	µV/V/kN	194/194
Output signal[1), 2)] Fz_L/Fz_R	mV/V	1,3/1,3
Bridge resistance Fz_L/Fz_R	Ω	350/350
Zero signal[1)]	mV/V	≤ 0,05
Amplitude non-linearity[3)]	%	≤ 1,0
Hysteresis[3)]	%	≤ 1,0
Channel crosstalk[3)]	%	≤ 5,0
Supply voltage	V	2–15
Ultimate load	%	150
Insulation resistance	MΩ	> 100
Temperature range	°C	–30..+70
Weight (approximate)	g	500
Application	H3-5%, SIDIIs	

All values measured at 10 V sensor supply voltage and at 23 °C.

[1)] Typical value, [2)] At nominal load, [3)] Relative nominal range

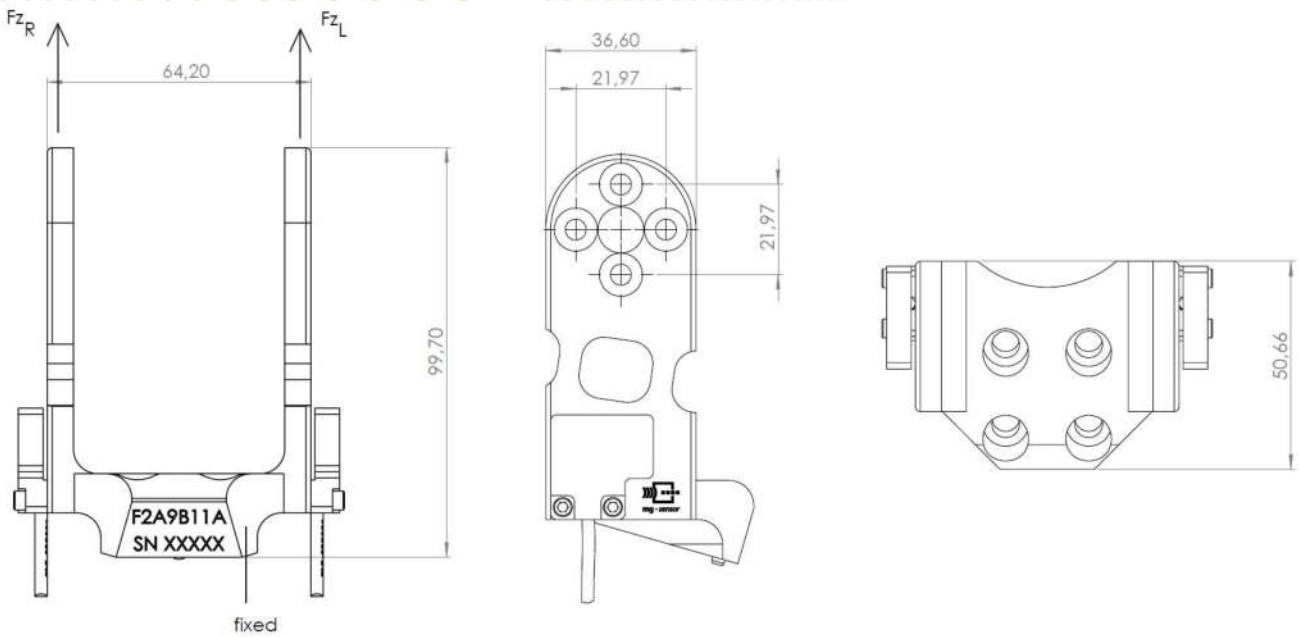

N5AUA11A

Dummy side view see page 137

Description	Load Cell, 5-axial Tibia, Upper	
Measuring range *Fx/Fy/Fz* *Mx/My*	kN Nm	11,1/11,1/11,1 395/395
Sensitivity[1)] *Fx/Fy/Fz* *Mx/My*	µV/V/kN µV/V/Nm	180/180/90 7,6/7,6
Output signal[1), 2)] *Fx/Fy/Fz/Mx/My*	mV/V	2,0/2,0/1,0/3,0/3,0
Bridge resistance *Fx/Fy/Fz/Mx/My*	Ω	350/350/700/350/350
Zero signal[1)]	mV/V	≤ 0,05
Amplitude non-linearity[3)]	%	≤ 1,0
Hysteresis[3)]	%	≤ 1,0
Channel crosstalk[3)]	%	≤ 5,0
Supply voltage	V	2–15
Ultimate load	%	150
Insulation resistance	MΩ	> 100
Temperature range	°C	–30..+70
Weight (approximate)	g	500
Application	H3-Family, FAA, SIDIIs, BioSID	

All values measured at 10 V sensor supply voltage and at 23 °C.

[1)] Typical value, [2)] At nominal load, [3)] Relative nominal range

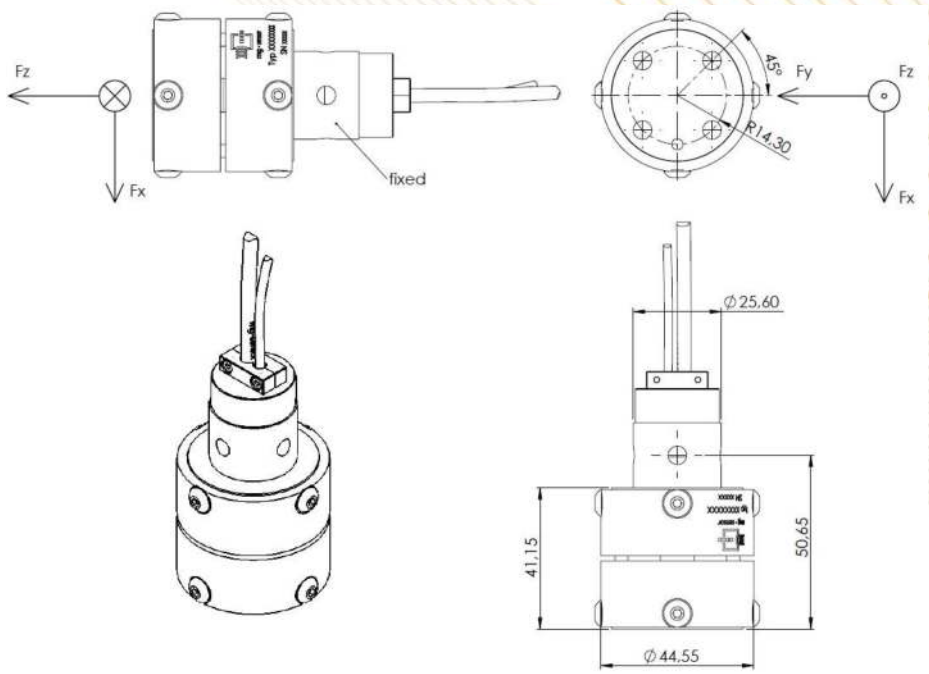

N5ATA11A

Dummy side view see page 137

Description	Load Cell, 5-axial Tibia, Lower	
Measuring range *Fx/Fy/Fz* *Mx/My*	kN Nm	11,1/11,1/11,1 395/395
Sensitivity[1)] *Fx/Fy/Fz* *Mx/My*	µV/V/kN µV/V/Nm	180/180/90 7,6/7,6
Output signal[1), 2)] *Fx/Fy/Fz/Mx/My*	mV/V	2,0/2,0/1,0/3,0/3,0
Bridge resistance *Fx/Fy/Fz/Mx/My*	Ω	350/350/700/350/350
Zero signal[1)]	mV/V	≤ 0,05
Amplitude non-linearity[3)]	%	≤ 1,0
Hysteresis[3)]	%	≤ 1,0
Channel crosstalk[3)]	%	≤ 5,0
Supply voltage	V	2–15
Ultimate load	%	150
Insulation resistance	MΩ	> 100
Temperature range	°C	–30..+70
Weight (approximate)	g	500
Application	H3-Family, FAA, SIDIIs, BioSID	

All values measured at 10 V sensor supply voltage and at 23 °C.
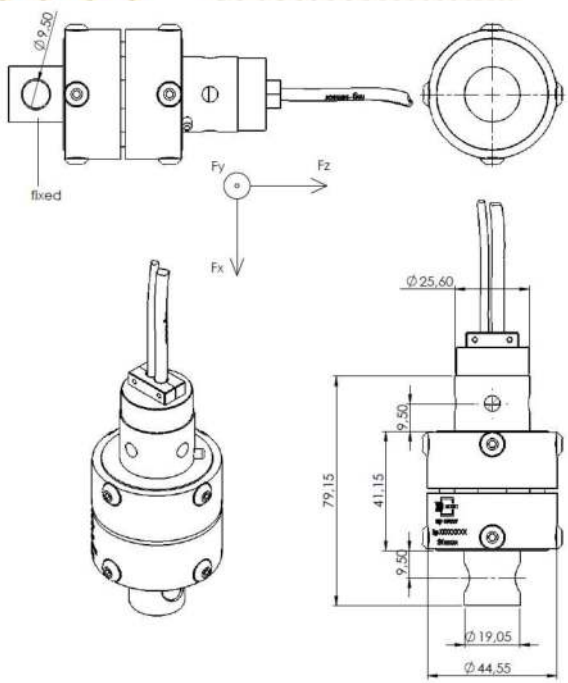
[1)] Typical value, [2)] At nominal load, [3)] Relative nominal range