Dummy Q

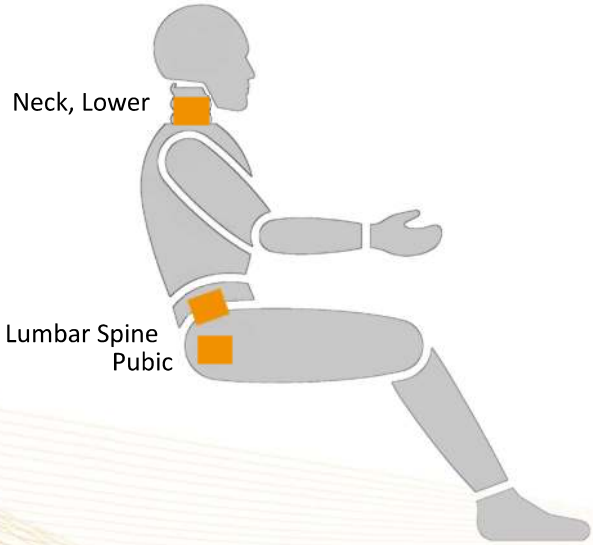

Location	Axial	Model*	Page
Neck, Lower	6	N6AJE11A	167
Neck, Lower/Lumbar Spine	6	N6AJA11A	168
Pubic	1	F1ANC11A	169
Pubic	1	F1ANE11A	170

*additional versions available on request!

N6AJE11A

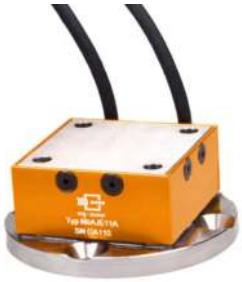

Dummy side view see page 158

Description	Load Cell, 6-axial Neck, Lower	
Measuring range *Fx/Fy/Fz* *Mx/My/Mz*	kN Nm	13,3/13,3/17,8 452/452/226
Sensitivity[1)] *Fx/Fy/Fz* *Mx/My/Mz*	µV/V/kN µV/V/Nm	158/158/67 5,5/5,5/11
Output signal[1), 2)] *Fx/Fy/Fz/Mx/My/Mz*	mV/V	2,1/2,1/1,2/2,5/2,5/2,5
Bridge resistance *Fx/Fy/Fz/Mx/My/Mz*	Ω	350/350/700/350/350/700
Zero signal[1)]	mV/V	≤ 0,05
Amplitude non-linearity[3)]	%	≤ 1,0
Hysteresis[3)]	%	≤ 1,0
Channel crosstalk[3)]	%	≤ 5,0
Supply voltage	V	2–15
Ultimate load	%	150
Insulation resistance	MΩ	> 100
Temperature range	°C	–30..+70
Weight (approximate)	g	280
Application	Q10	

All values measured at 10 V sensor supply voltage and at 23 °C.

[1)] Typical value, [2)] At nominal load, [3)] Relative nominal range

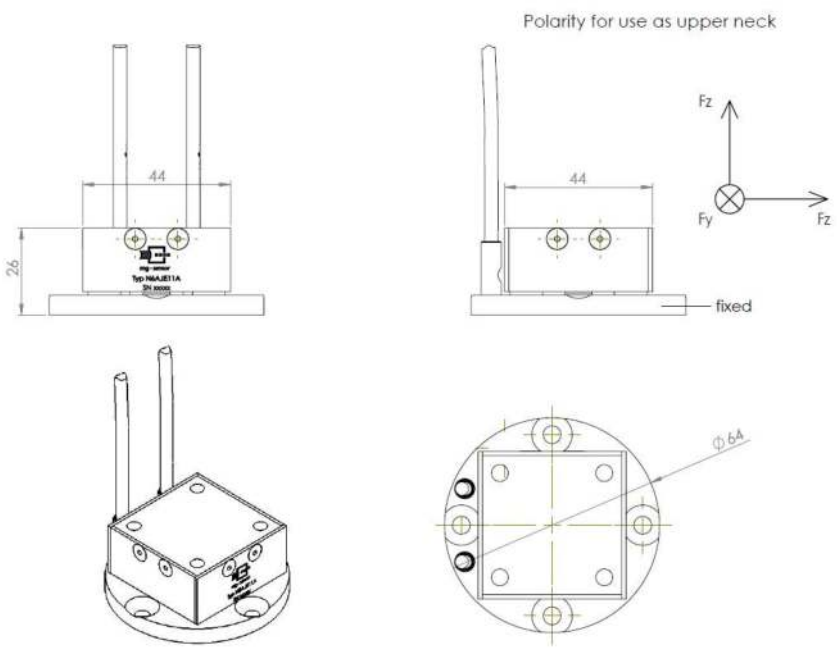

N6AJA11A

Dummy side view see page 158

Description	Load Cell, 6-axial Neck, Lower/Lumbar Spine	
Measuring range *Fx/Fy/Fz* *Mx/My/Mz*	kN Nm	5,0/5,0/6,0 150/150/80
Sensitivity[1)] *Fx/Fy/Fz* *Mx/My/Mz*	µV/V/kN µV/V/Nm	400/400/167 13,3/13,3/31,3
Output signal[1), 2)] *Fx/Fy/Fz/Mx/My/Mz*	mV/V	2,0/2,0/1,0/2,0/2,0/2,5
Bridge resistance *Fx/Fy/Fz/Mx/My/Mz*	Ω	350/350/700/350/350/700
Zero signal[1)]	mV/V	≤ 0,05
Amplitude non-linearity[3)]	%	≤ 1,0
Hysteresis[3)]	%	≤ 1,0
Channel crosstalk[3)]	%	≤ 5,0
Supply voltage	V	2–15
Ultimate load	%	150
Insulation resistance	MΩ	> 100
Temperature range	°C	–30..+70
Weight (approximate)	g	120
Application	Q0, Q1, Q1,5, Q3, Q3s, Q6	

All values measured at 10 V sensor supply voltage and at 23 °C.

[1)] Typical value, [2)] At nominal load, [3)] Relative nominal range

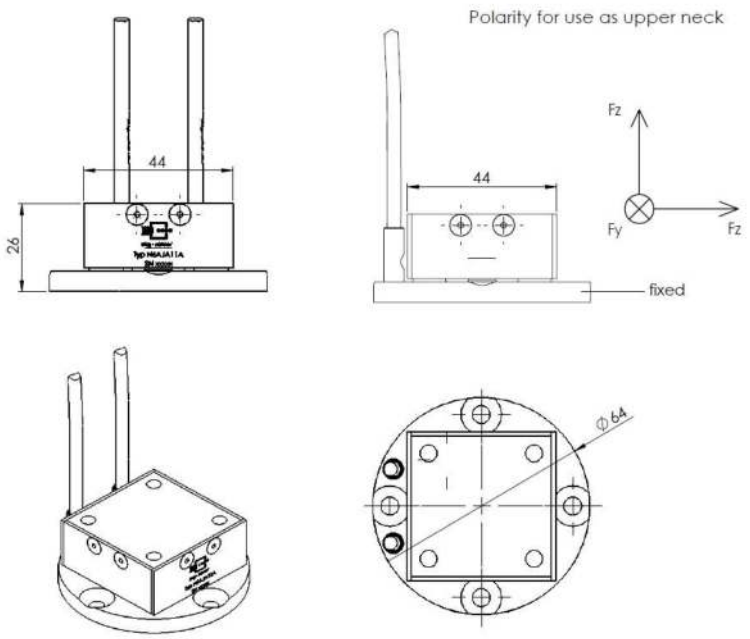

F1ANC11A

Dummy side view see page 158

Description	Load Cell, 1-axial Pubic	
Measuring range *Fy*	kN	12
Sensitivity[1)] *Fy*	µV/V/kN	167
Output signal[1), 2)] *Fy*	mV/V	2,0
Bridge resistance *Fy*	Ω	350
Zero signal[1)]	mV/V	≤ 0,05
Amplitude non-linearity[3)]	%	≤ 1,0
Hysteresis[3)]	%	≤ 1,0
Channel crosstalk[3)]	%	-
Supply voltage	V	2–15
Ultimate load	%	150
Insulation resistance	MΩ	> 100
Temperature range	°C	–30..+70
Weight (approximate)	g	130
Application	WorldSID, Q10	

All values measured at 10 V sensor supply voltage and at 23 °C.

[1)] Typical value, [2)] At nominal load, [3)] Relative nominal range

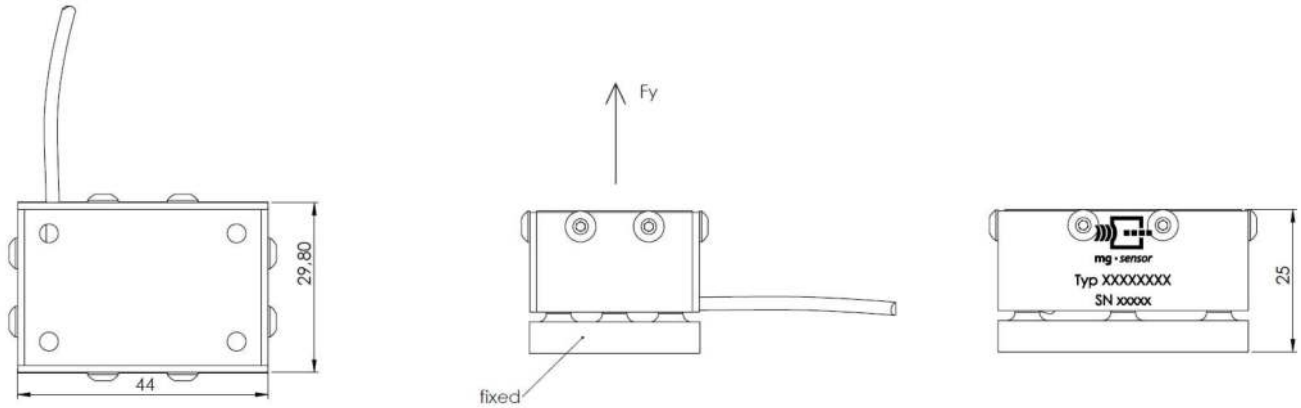

F1ANE11A

Dummy side view see page 158

Description	Load Cell, 1-axial Pubic	
Measuring range *Fy*	kN	12
Sensitivity[1)] *Fy*	µV/V/kN	167
Output signal[1), 2)] *Fy*	mV/V	2,0
Bridge resistance *Fy*	Ω	350
Zero signal[1)]	mV/V	≤ 0,05
Amplitude non-linearity[3)]	%	≤ 1,0
Hysteresis[3)]	%	≤ 1,0
Channel crosstalk[3)]	%	-
Supply voltage	V	2–15
Ultimate load	%	150
Insulation resistance	MΩ	> 100
Temperature range	°C	–30..+70
Weight (approximate)	g	130
Application	Q10	

All values measured at 10 V sensor supply voltage and at 23 °C.
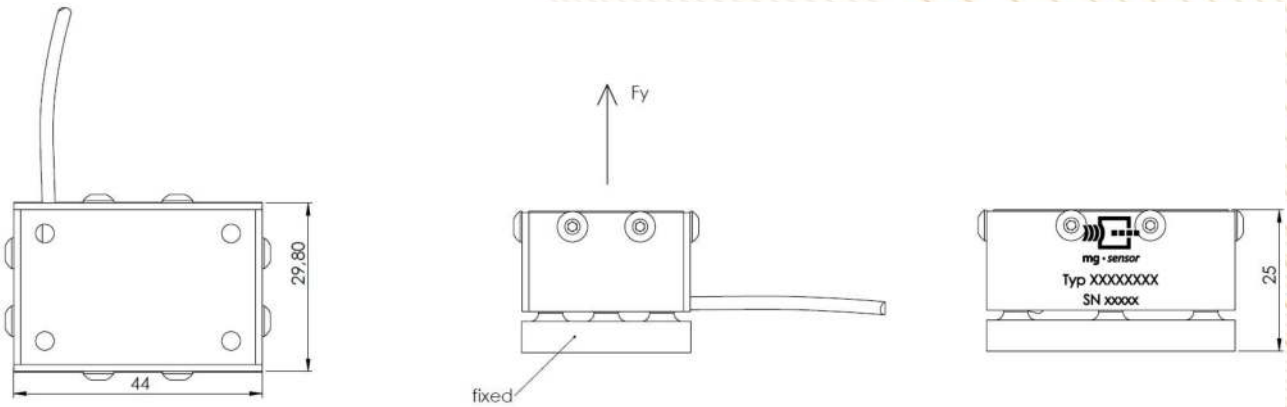
[1)] Typical value, [2)] At nominal load, [3)] Relative nominal range