Dummy EuroSID

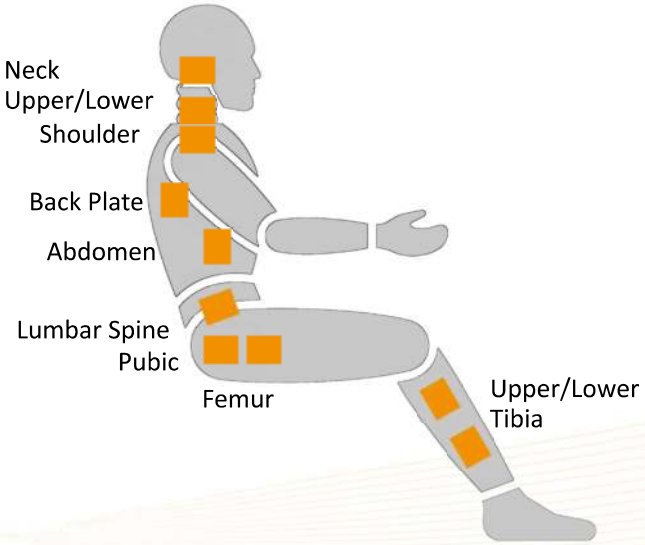

Location	Axial	Model*	Page
Neck, Upper	6	N6ALC11A	138
Neck, Lower	6	N6AKB11A	139
Shoulder	3	F3AQF11A	140
Back Plate	4	N4A6A11A; N4A6B10A	141
Abdomen	1	F1A1A11A	143
Lumbar Spine	4	N4AIA10A	144
Pubic	1	F1AND11A	145
Femur	6	N6ACB11A	146
Femur	6	N6ACC11A	on request

*additional versions available on request!

N6ALC11A

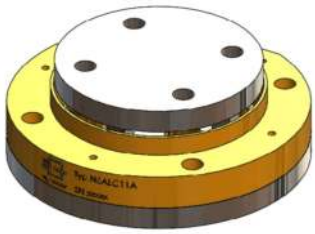

Dummy side view see page 127

Description	Load Cell, 6-axial Neck, Upper	
Measuring range *Fx/Fy/Fz* *Mx/My/Mz*	kN Nm	10/10/15 300/300/300
Sensitivity[1)] *Fx/Fy/Fz* *Mx/My/Mz*	µV/V/kN µV/V/Nm	250/250/107 6,3/6,3/10,7
Output signal[1), 2)] *Fx/Fy/Fz/Mx/My/Mz*	mV/V	2,5/2,5/1,6/1,9/1,9/3,2
Bridge resistance *Fx/Fy/Fz/Mx/My/Mz*	Ω	350/350/700/350/350/700
Zero signal[1)]	mV/V	≤ 0,05
Amplitude non-linearity[3)]	%	≤ 1,0
Hysteresis[3)]	%	≤ 1,0
Channel crosstalk[3)]	%	≤ 5,0
Supply voltage	V	2–15
Ultimate load	%	150
Insulation resistance	MΩ	> 100
Temperature range	°C	–30..+70
Weight (approximate)	g	605
Application	EuroSID, ES2, ES2 RE	

All values measured at 10 V sensor supply voltage and at 23 °C.

[1)] Typical value, [2)] At nominal load, [3)] Relative nominal range

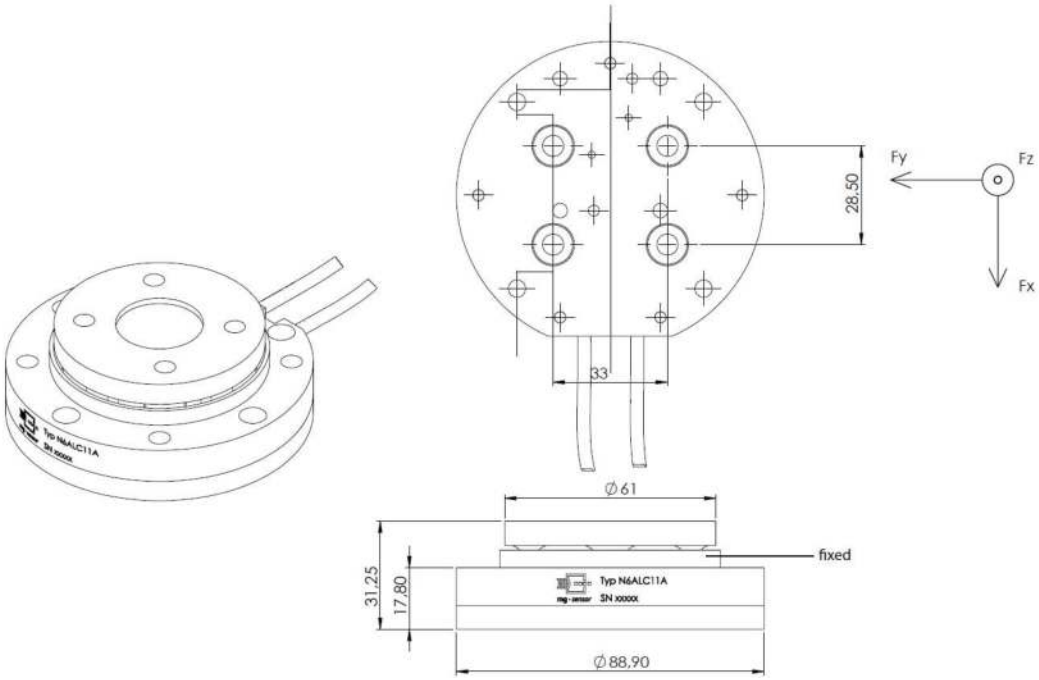

N6AKB11A

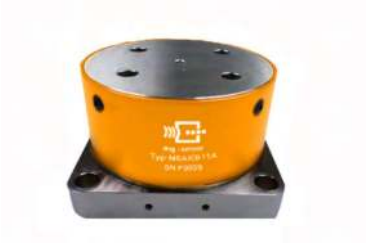

Dummy side view see page 127

Description	Load Cell, 6-axial Neck, Lower	
Measuring range *Fx/Fy/Fz* *Mx/My/Mz*	kN Nm	12/12/14 452/452/305
Sensitivity[1)] *Fx/Fy/Fz* *Mx/My/Mz*	µV/V/kN µV/V/Nm	133/133/64 3,8/3,8/6,6
Output signal[1), 2)] *Fx/Fy/Fz/Mx/My/Mz*	mV/V	1,6/1,6/0,9/1,7/1,7/2,0
Bridge resistance *Fx/Fy/Fz/Mx/My/Mz*	Ω	350/350/700/350/350/700
Zero signal[1)]	mV/V	≤ 0,05
Amplitude non-linearity[3)]	%	≤ 1,0
Hysteresis[3)]	%	≤ 1,0
Channel crosstalk[3)]	%	≤ 5,0
Supply voltage	V	2–15
Ultimate load	%	150
Insulation resistance	MΩ	> 100
Temperature range	°C	–30..+70
Weight (approximate)	g	-
Application	EuroSID, ES2, ES2 RE	

All values measured at 10 V sensor supply voltage and at 23 °C.

[1)] Typical value, [2)] At nominal load, [3)] Relative nominal range

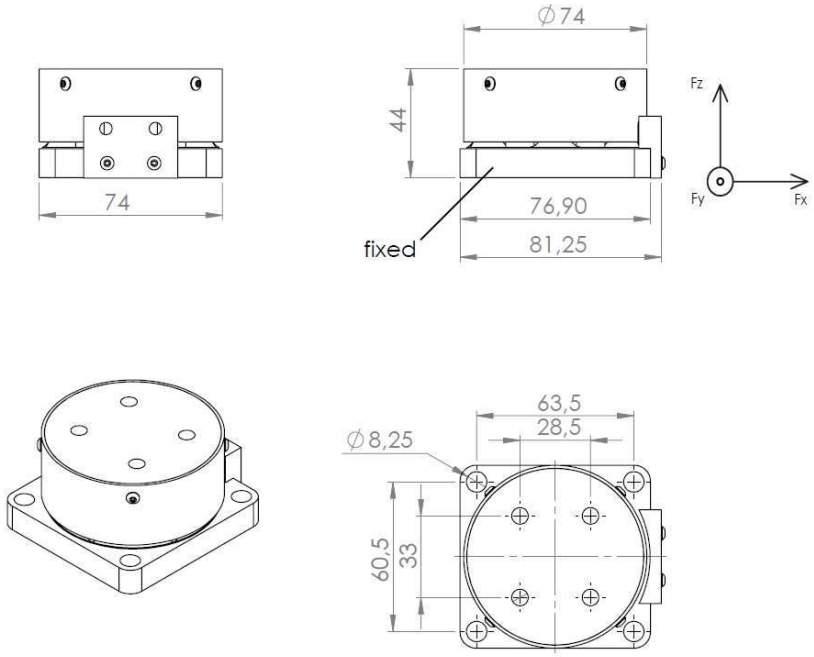

F3AQF11A

Dummy side view see page 127

Description	Load Cell, 3-axial Shoulder	
Measuring range *Fx/Fy/Fz*	kN	4,0/8,0/4,0
Sensitivity[1] *Fx/Fy/Fz*	µV/V/kN	575/238/575
Output signal[1), 2)] *Fx/Fy/Fz*	mV/V	2,3/1,9/2,3
Bridge resistance *Fx/Fy/Fz*	Ω	350/700/350
Zero signal[1]	mV/V	≤ 0,05
Amplitude non-linearity[3]	%	≤ 1,0
Hysteresis[3]	%	≤ 1,0
Channel crosstalk[3]	%	≤ 5,0
Supply voltage	V	2–15
Ultimate load	%	150
Insulation resistance	MΩ	> 100
Temperature	°C	–30..+70
Weight (approximate)	g	260
Application	EuroSID, ES2, ES2 RE	

All values measured at 10 V sensor supply voltage and at 23 °C.

[1] Typical value, [2] At nominal load, [3] Relative nominal range

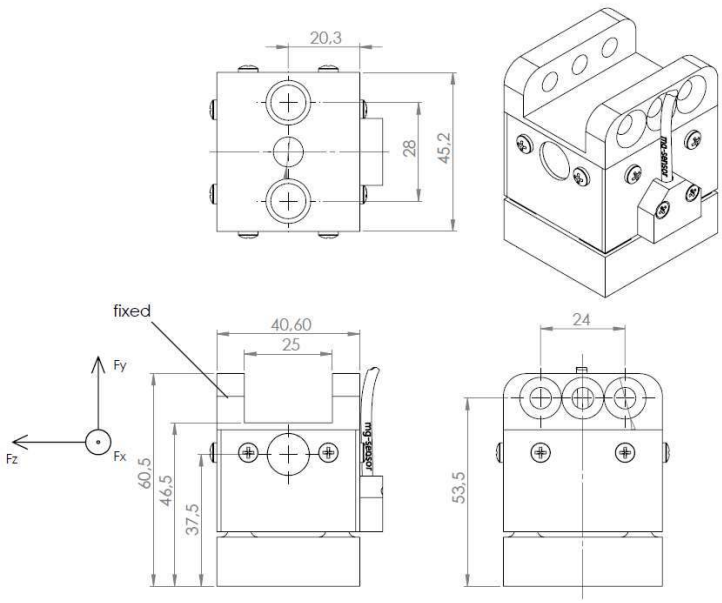

Polarity indication for use as left shoulder
(cable outlet pointing upwards)

N4A6A11A

Dummy side view see page 127

Description	Load Cell, 4-axial Back Plate	
Measuring range *Fx/Fy* *My/Mz*	kN Nm	3,0/3,0 160/160
Sensitivity[1)] *Fx/Fy* *My/Mz*	µV/V/kN µV/V/Nm	300/300 2,5/4,4
Output signal[1), 2)] *Fx/Fy/My/Mz*	mV/V	0,9/0,9/0,4/0,7
Bridge resistance *Fx/Fy/My/Mz*	Ω	350/350/700/700
Zero signal[1)]	mV/V	≤ 0,05
Amplitude non-linearity[3)]	%	≤ 1,0
Hysteresis[3)]	%	≤ 1,0
Channel crosstalk[3)]	%	≤ 5,0
Supply voltage	V	2–15
Ultimate load	%	150
Insulation resistance	MΩ	> 100
Temperature range	°C	–30..+70
Weight (approximate)	g	1300
Application	ES2 RE	

All values measured at 10 V sensor supply voltage and at 23 °C.

[1)] Typical value, [2)] At nominal load, [3)] Relative nominal range

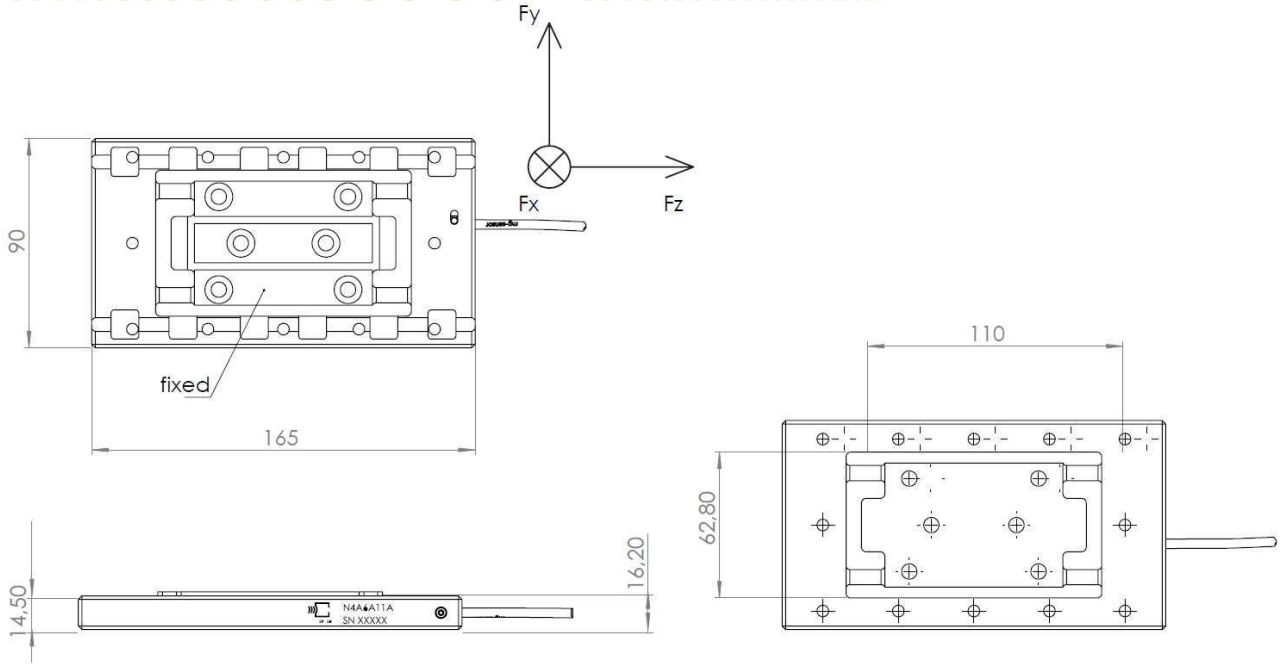

N4A6B10A

Dummy side view see page 127

Description	Load Cell, 4-axial Back Plate	
Measuring range *Fx/Fy* *My/Mz*	kN Nm	3,0/3,0 160/160
Sensitivity[1)] *Fx/Fy* *My/Mz*	µV/V/kN µV/V/Nm	500/500 13,8/7,5
Output signal[1), 2)] *Fx/Fy/My/Mz*	mV/V	1,5/1,5/2,2/1,2
Bridge resistance *Fx/Fy/My/Mz*	Ω	700/700/700/350
Zero signal[1)]	mV/V	≤ 0,05
Amplitude non-linearity[3)]	%	≤ 1,0
Hysteresis[3)]	%	≤ 1,0
Channel crosstalk[3)]	%	≤ 5,0
Supply voltage	V	2–15
Ultimate load	%	150
Insulation resistance	MΩ	> 100
Temperature range	°C	–30..+70
Weight (approximate)	g	1300
Application	EuroSID, ES2	

All values measured at 10 V sensor supply voltage and at 23 °C.

[1)] Typical value, [2)] At nominal load, [3)] Relative nominal range

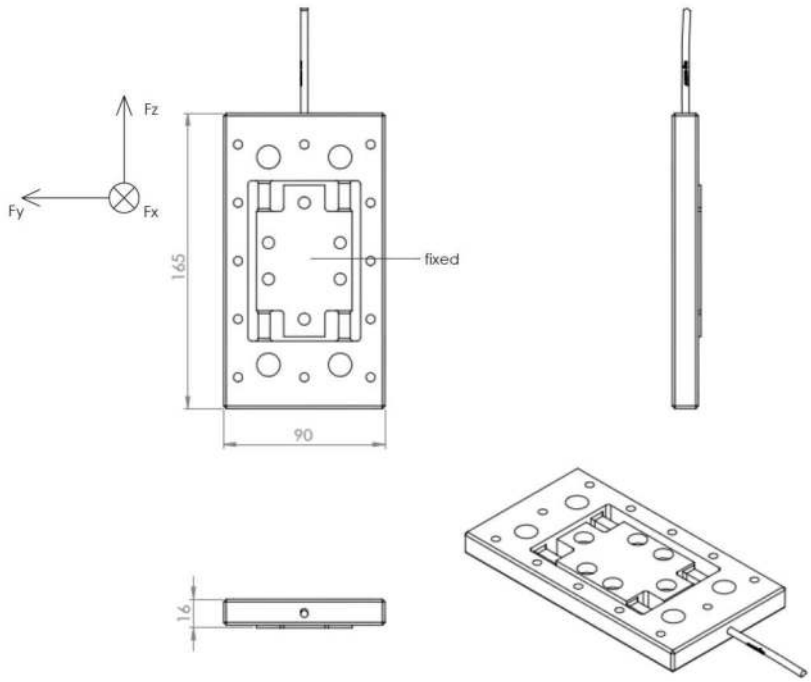

F1A1A11A

Dummy side view see page 127

Description	Load Cell, 1-axial Abdomen	
Measuring range *Fy*	kN	5,0
Sensitivity[1)] *Fy*	µV/V/kN	600
Output signal[1), 2)] *Fy*	mV/V	3,0
Bridge resistance *Fy*	Ω	700
Zero signal[1)]	mV/V	≤ 0,05
Amplitude non-linearity[3)]	%	≤ 1,0
Hysteresis[3)]	%	≤ 1,0
Channel crosstalk[3)]	%	-
Supply voltage	V	2–15
Ultimate load	%	150
Insulation resistance	MΩ	> 100
Temperature range	°C	–30..+70
Weight (approximate)	g	210
Application	EuroSID, ES2, ES2 RE	

All values measured at 10 V sensor supply voltage and at 23 °C.

[1)] Typical value, [2)] At nominal load, [3)] Relative nominal range

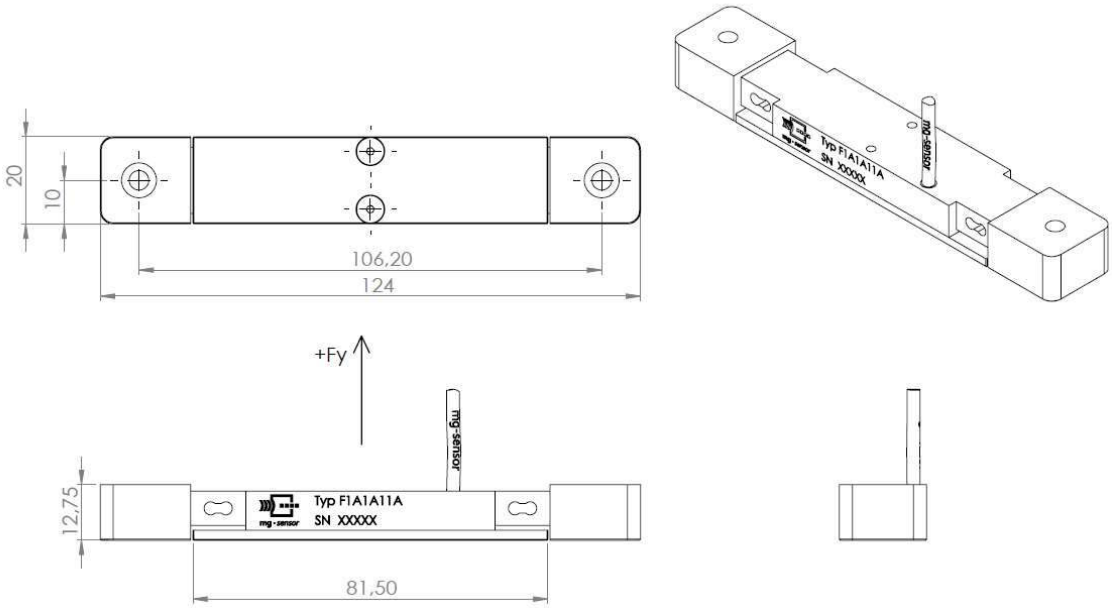

N4AIA10A

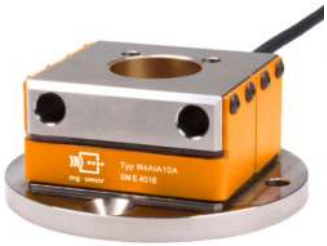

Dummy side view see page 127

Description	Load Cell, 4-axial Lumbar Spine	
Measuring range *Fx/Fy* *Mx/My*	kN Nm	14/14 1000/1000
Sensitivity[1)] *Fx/Fy* *Mx/My*	µV/V/kN µV/V/Nm	121/121 1,9/1,9
Output signal[1), 2)] *Fx/Fy/Mx/My*	mV/V	1,7/1,7/1,9/1,9
Bridge resistance *Fx/Fy/Mx/My*	Ω	350/350/700/700
Zero signal[1)]	mV/V	≤ 0,05
Amplitude non-linearity[3)]	%	≤ 1,0
Hysteresis[3)]	%	≤ 1,0
Channel crosstalk[3)]	%	≤ 5,0
Supply voltage	V	2–15
Ultimate load	%	150
Insulation resistance	MΩ	> 100
Temperature range	°C	–30..+70
Weight (approximate)	g	510
Application	EuroSID, ES2, ES2 RE	

All values measured at 10 V sensor supply voltage and at 23 °C.

[1)] Typical value, [2)] At nominal load, [3)] Relative nominal range

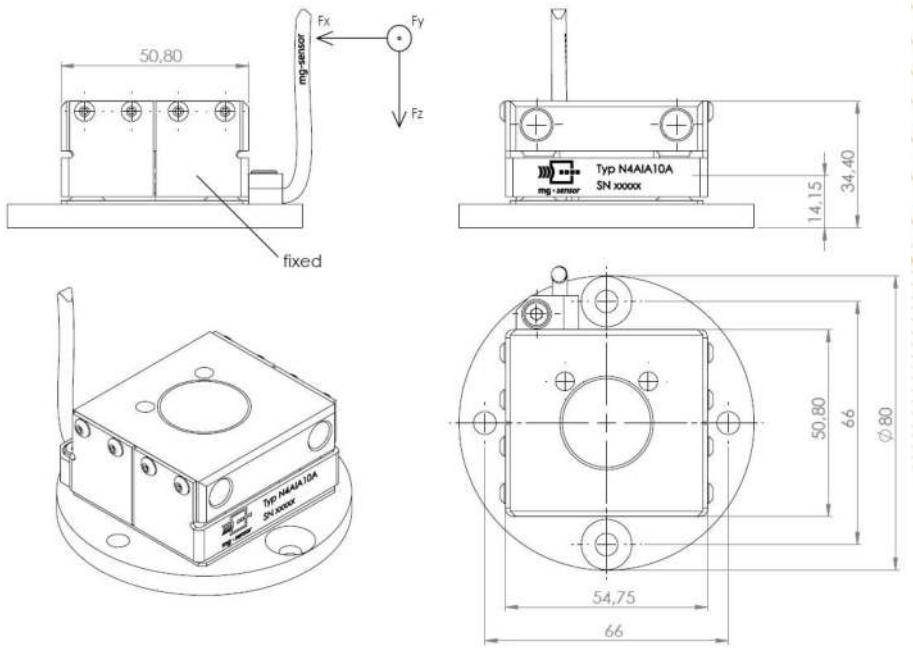

F1AND11A

Dummy side view see page 127

Description	Load Cell, 1-axial Pubic	
Measuring range *Fy*	kN	20
Sensitivity[1)] *Fy*	µV/V/kN	130
Output signal[1), 2)] *Fy*	mV/V	2,6
Bridge resistance *Fy*	Ω	700
Zero signal[1)]	mV/V	≤ 0,05
Amplitude non-linearity[3)]	%	≤ 1,0
Hysteresis[3)]	%	≤ 1,0
Channel crosstalk[3)]	%	-
Supply voltage	V	2–15
Ultimate load	%	150
Insulation resistance	MΩ	> 100
Temperature range	°C	–30..+70
Weight (approximate)	g	130
Application	EuroSID, ES2, ES2 RE	

All values measured at 10 V sensor supply voltage and at 23 °C.

[1)] Typical value, [2)] At nominal load, [3)] Relative nominal range

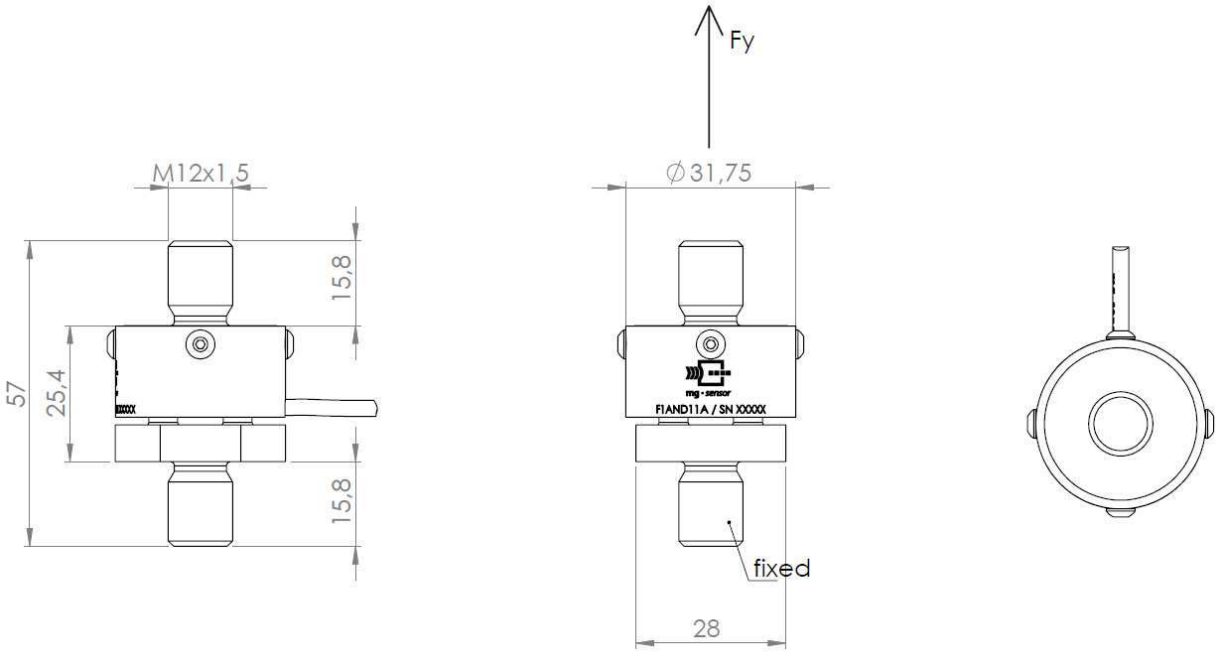

N6ACB11A

Dummy side view see page 127

Description	Load Cell, 6-axial Femur (with aluminum caps)*	
Measuring range *Fx/Fy/Fz* *Mx/My/Mz*	kN Nm	13,3/13,3/22,2 339/339/339
Sensitivity[1)] *Fx/Fy/Fz* *Mx/My/Mz*	µV/V/kN µV/V/Nm	135/135/54 4,4/4,4/7,7
Output signal[1), 2)] *Fx/Fy/Fz/Mx/My/Mz*	mV/V	1,8/1,8/1,2/1,5/1,5/2,6
Bridge resistance *Fx/Fy/Fz/Mx/My/Mz*	Ω	350/350/700/350/350/700
Zero signal[1)]	mV/V	≤ 0,05
Amplitude non-linearity[3)]	%	≤ 1,0
Hysteresis[3)]	%	≤ 1,0
Channel crosstalk[3)]	%	≤ 5,0
Supply voltage	V	2–15
Ultimate load	%	150
Insulation resistance	MΩ	> 100
Temperature range	°C	–30..+70
Weight (approximate)	g	850
Application	H2-50%, H3-Family, Thor, FAA, SID-Family	

All values measured at 10 V sensor supply voltage and at 23 °C.
[1)] Typical value, [2)] At nominal load, [3)] Relative nominal range
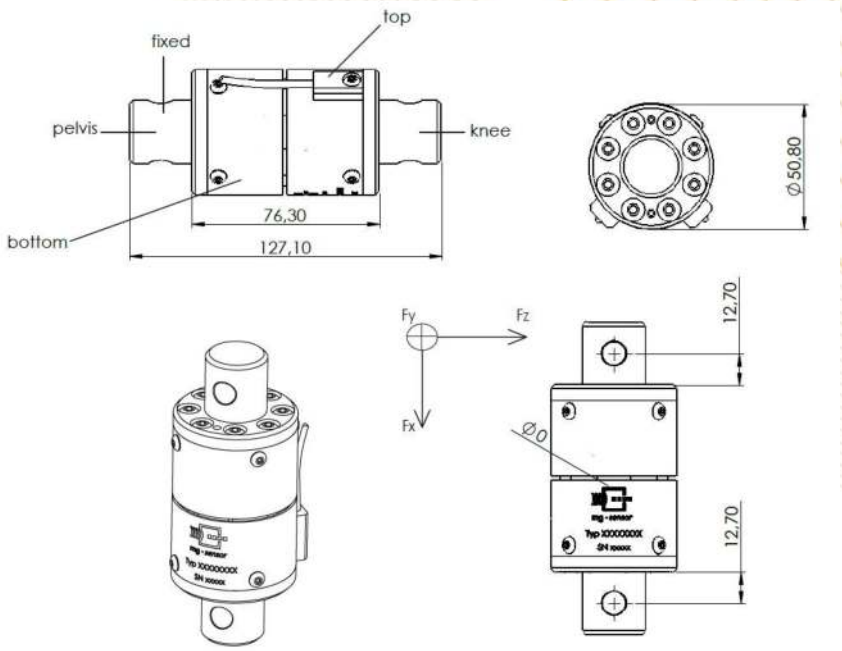
*likewise with steel caps (N6ACC11A) or without caps (N6ACF11A).