Dummy WorldSID

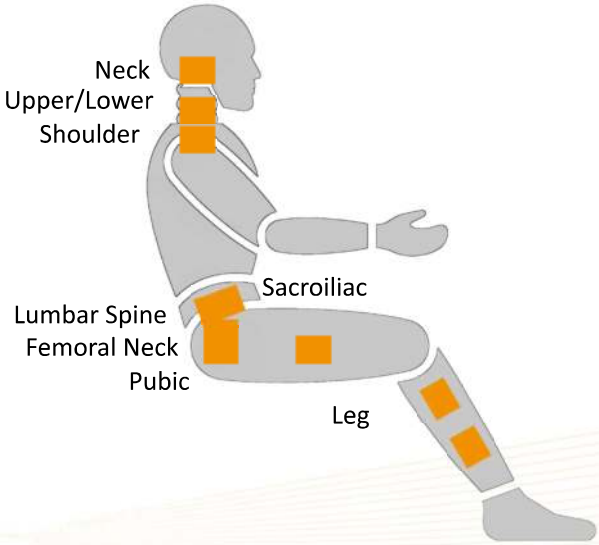

Location	Axial	Model*	Page
Neck	6	N6AJD11A	148
Shoulder	3	F3AQC11A	149
Lumbar Spine	6	N6AID11A	on request
Sacroiliac	12	NCAPA11A	150
Pubic	1	F1ANC11A	151
Femoral Neck	3	F3AJA10A	on request
Leg	1	F1AGA11A	152
Leg	6	N6AGA10A	153

*additional versions available on request!

N6AJD11A

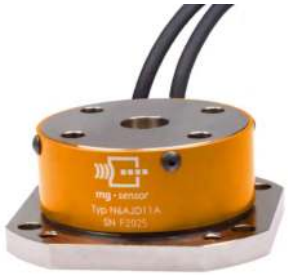

Dummy side view see page 151

Description	Load Cell, 6-axial Neck	
Measuring range *Fx/Fy/Fz* *Mx/My/Mz*	kN Nm	10/10/12 300/300/200
Sensitivity[1)] *Fx/Fy/Fz* *Mx/My/Mz*	µV/V/kN µV/V/Nm	110/110/110 6,0/6,0/9,5
Output signal[1), 2)] *Fx/Fy/Fz/Mx/My/Mz*	mV/V	1,1/1,1/1,1/1,8/1,8/1,9
Bridge resistance *Fx/Fy/Fz/Mx/My/Mz*	Ω	350/350/700/350/350/700
Zero signal[1)]	mV/V	≤ 0,05
Amplitude non-linearity[3)]	%	≤ 1,0
Hysteresis[3)]	%	≤ 1,0
Channel crosstalk[3)]	%	≤ 5,0
Supply voltage	V	2–15
Ultimate load	%	150
Insulation resistance	MΩ	> 100
Temperature range	°C	–30..+70
Weight (approximate)	g	360
Application	WorldSID	

All values measured at 10 V sensor supply voltage and at 23 °C.

[1)] Typical value, [2)] At nominal load, [3)] Relative nominal range

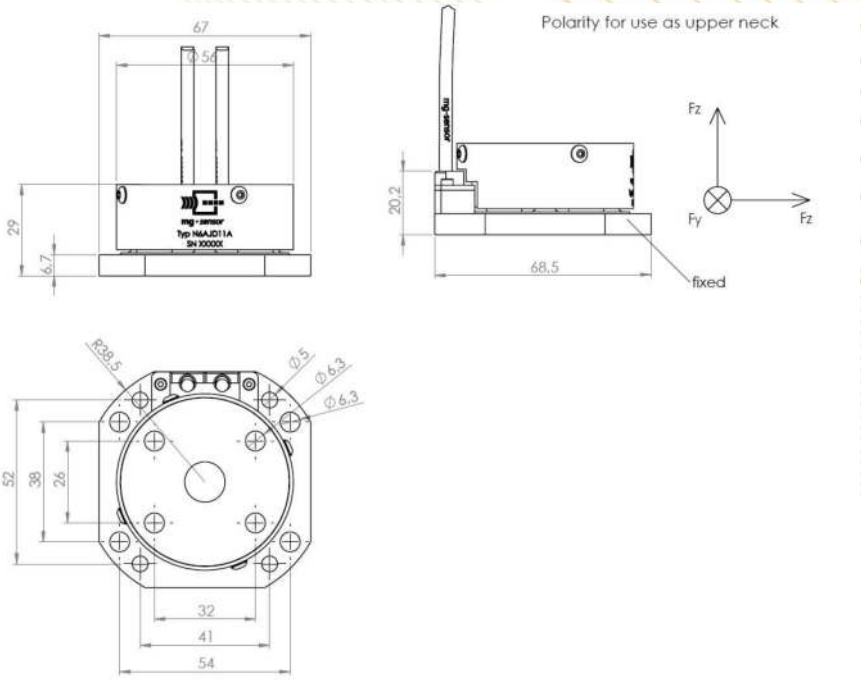

F3AQC11A

Dummy side view see page 151

Description	Load Cell, 3-axial Shoulder	
Measuring range *Fx/Fy/Fz*	kN	5,0/10,0/5,0
Sensitivity[1] *Fx/Fy/Fz*	µV/V/kN	440/200/440
Output signal[1), 2)] *Fx/Fy/Fz*	mV/V	2,2/2,0/2,2
Bridge resistance *Fx/Fy/Fz*	Ω	350/350/700
Zero signal[1)]	mV/V	≤ 0,05
Amplitude non-linearity[3)]	%	≤ 1,0
Hysteresis[3)]	%	≤ 1,0
Channel crosstalk[3)]	%	≤ 5,0
Supply voltage	V	2–15
Ultimate load	%	150
Insulation resistance	MΩ	> 100
Temperature range	°C	–30..+70
Weight (approximate)	g	100
Application	WorldSID	

All values measured at 10 V sensor supply voltage and at 23 °C.

[1)] Typical value, [2)] At nominal load, [3)] Relative nominal range

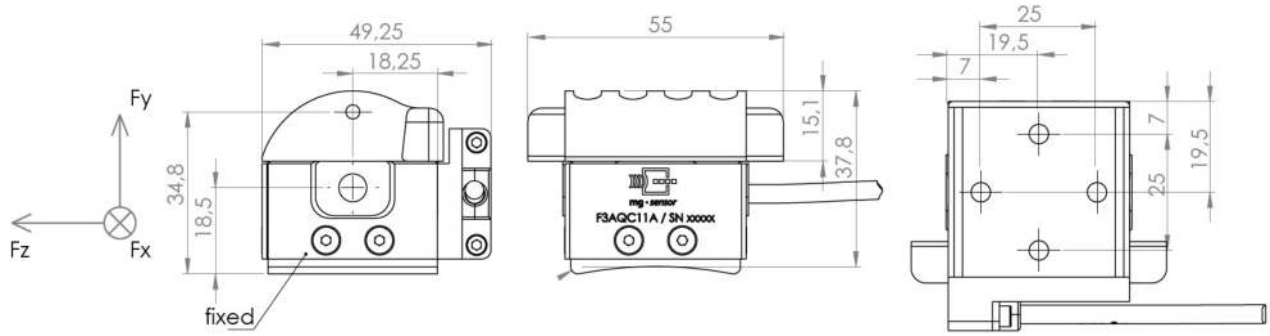

NCAPA11A

Dummy side view see page 151

Description	Load Cell, 12-axial Sacroiliac	
Measuring range *Fx/Fy/Fz* *Mx/My/Mz*	kN Nm	6,0/12,0/6,0 1000/400/400
Sensitivity[1)] *Fx/Fy/Fz* *Mx/My/Mz*	µV/V/kN µV/V/Nm	450/50/450 3,0/7,3/2,5
Output signal[1), 2)] *Fx/Fy/Fz/Mx/My/Mz*	mV/V	2,7/0,6/2,7/3,0/2,9/1,0
Bridge resistance *Fx/Fy/Fz/Mx/My/Mz*	Ω	350/1400/350/700/350/700
Zero signal[1)]	mV/V	≤ 0,05
Amplitude non-linearity[3)]	%	≤ 1,0
Hysteresis[3)]	%	≤ 1,0
Channel crosstalk[3)]	%	≤ 5,0
Supply voltage	V	2–15
Ultimate load	%	150
Insulation resistance	MΩ	> 100
Temperature range	°C	–30..+70
Weight (approximate)	g	920
Application	WorldSID	

All values measured at 10 V sensor supply voltage and at 23 °C.

[1)] Typical value, [2)] At nominal load, [3)] Relative nominal range

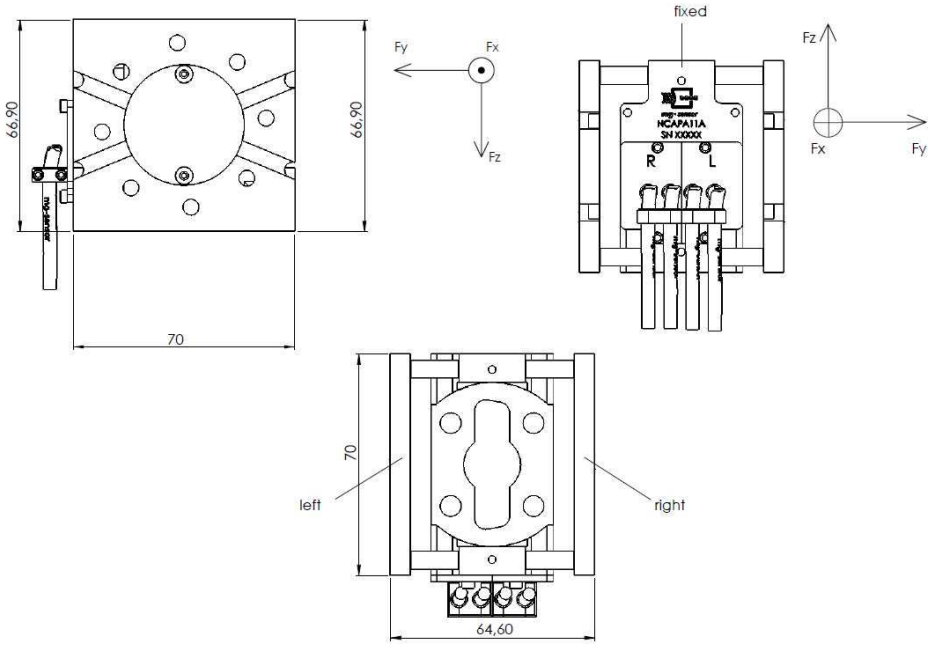

F1ANC11A

Dummy side view see page 151

Description	Load Cell, 1-axial Pubic	
Measuring range *Fy*	kN	12
Sensitivity[1)] *Fy*	µV/V/kN	167
Output signal[1), 2)] *Fy*	mV/V	2,0
Bridge resistance *Fy*	Ω	350
Zero signal[1)]	mV/V	≤ 0,05
Amplitude non-linearity[3)]	%	≤ 1,0
Hysteresis[3)]	%	≤ 1,0
Channel crosstalk[3)]	%	–
Supply voltage	V	2–15
Ultimate load	%	150
Insulation resistance	MΩ	> 100
Temperature range	°C	–30..+70
Weight (approximate)	g	130
Application	WorldSID, Q10	

All values measured at 10 V sensor supply voltage and at 23 °C.

[1)] Typical value, [2)] At nominal load, [3)] Relative nominal range

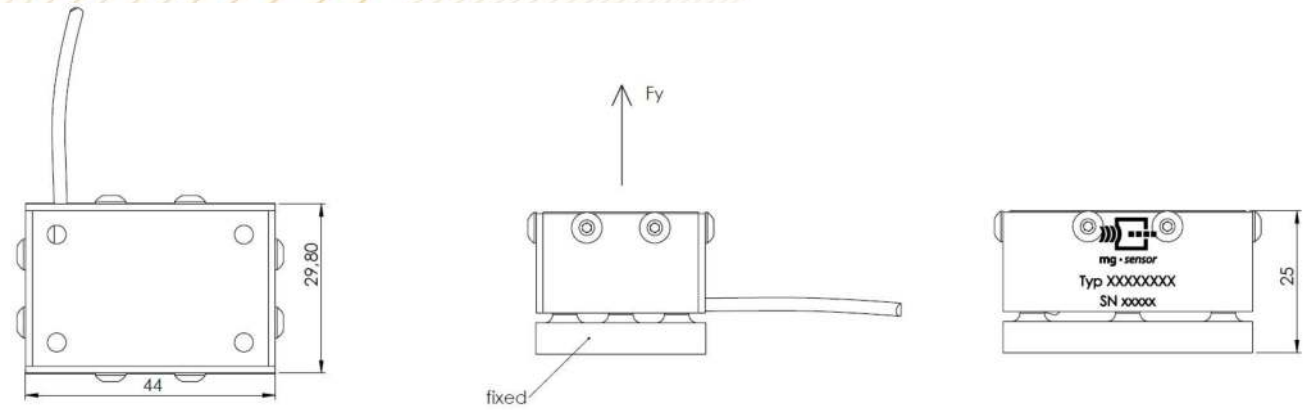

F1AGA11A

Dummy side view see page 151

Description	Load Cell, 1-axial Leg, Universal	
Measuring range *Fz*	kN	15
Sensitivity[1)] *Fz*	µV/V/kN	73
Output signal[1), 2)] *Fz*	mV/V	1,1
Bridge resistance *Fz*	Ω	700
Zero signal[1)]	mV/V	≤ 0,05
Amplitude non-linearity[3)]	%	≤ 1,0
Hysteresis[3)]	%	≤ 1,0
Channel crosstalk[3)]	%	-
Supply voltage	V	2–15
Ultimate load	%	150
Insulation resistance	MΩ	> 100
Temperature range	°C	–30..+70
Weight (approximate)	g	480
Application	WorldSID	

All values measured at 10 V sensor supply voltage and at 23 °C.

[1)] Typical value, [2)] At nominal load, [3)] Relative nominal range

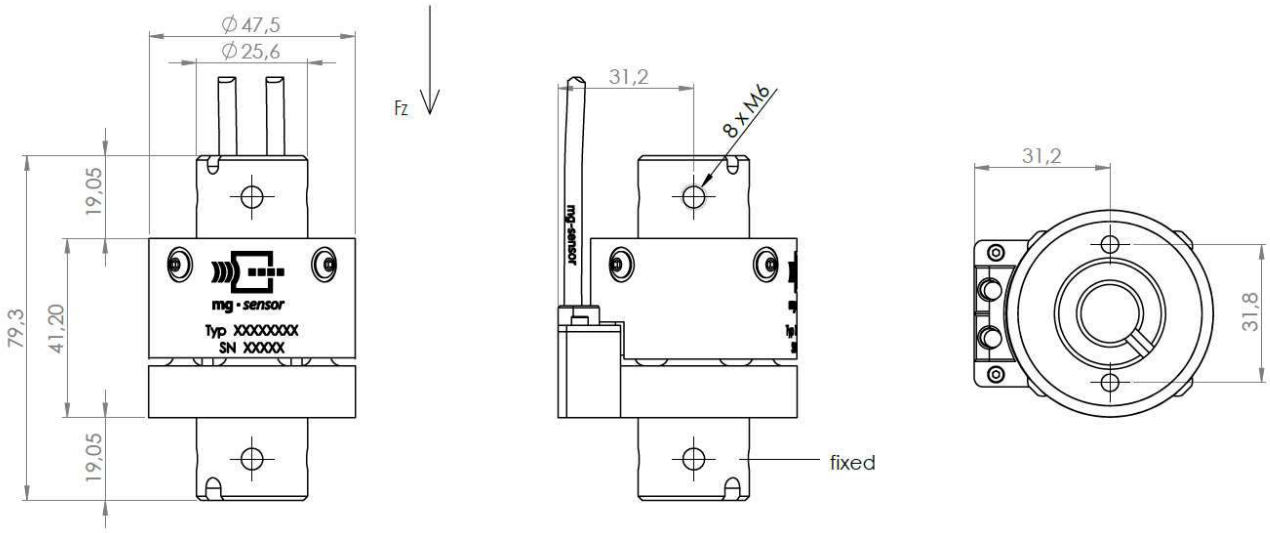

N6AGA10A

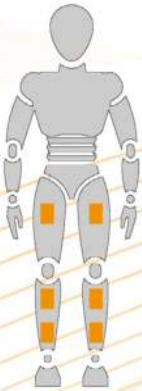

Dummy side view see page 151

Description	Load Cell, 6-axial Leg, Universal	
Measuring range *Fx/Fy/Fz* *Mx/My/Mz*	kN Nm	15/15/15 350/350/200
Sensitivity[1)] *Fx/Fy/Fz* *Mx/My/Mz*	µV/V/kN µV/V/Nm	166/166/100 8,3/8,3/16,5
Output signal[1), 2)] *Fx/Fy/Fz/Mx/My/Mz*	mV/V	2,5/2,5/1,5/2,9/2,9/3,0
Bridge resistance *Fx/Fy/Fz/Mx/My/Mz*	Ω	350/350/700/350/350/700
Zero signal[1)]	mV/V	≤ 0,05
Amplitude non-linearity[3)]	%	≤ 1,0
Hysteresis[3)]	%	≤ 1,0
Channel crosstalk[3)]	%	≤ 5,0
Supply voltage	V	2–15
Ultimate load	%	150
Insulation resistance	MΩ	> 100
Temperature range	°C	–30..+70
Weight (approximate)	g	480
Application	Thor, WorldSID	

All values measured at 10 V sensor supply voltage and at 23 °C.
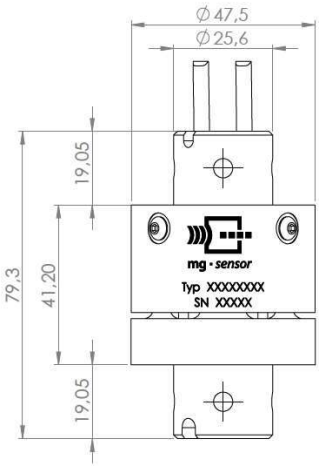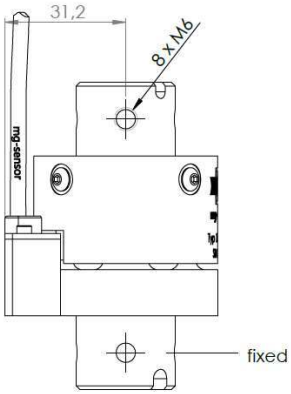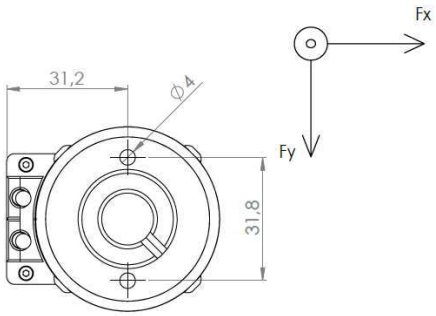
[1)] Typical value, [2)] At nominal load, [3)] Relative nominal range